VCSF136DSS01

AIR FLOW 1
CABINET 2
CONTROL 3
DISPENSER 4
FZ DOOR 5
FZ LINER 6
FZ SHELF 7
ICE MAKER 8
ICE MOTOR 9
REF DOOR 10
REF LINER 11
REF SHELF 12
UNIT 13
Appendix A:Pages Index . . . . . A
Appendix B:Parts Index . . . . . B

AIR FLOW

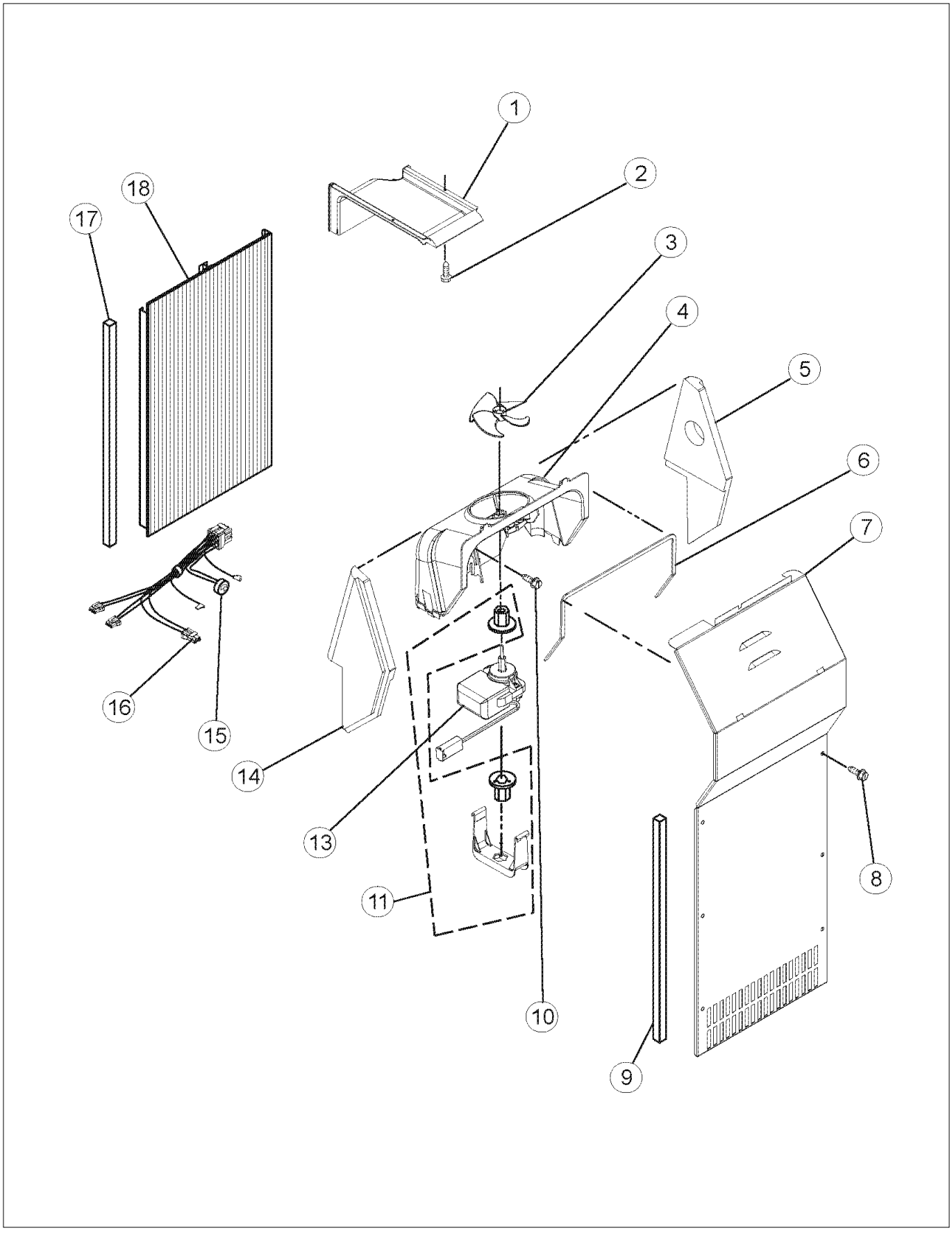

Item	Part No.	Name	Qty	Uom	NOTES
1	021453-000	AIR DUCT, UPPER	1	EA	
2	037323-000	SCREW	1	EA	
3	021741-000	BLADE, FAN (EVAPORATOR)	1	EA	
4	021408-000	FAN SCROLL	1	EA	
5	021459-000	SUPPORT, R.S	1	EA	
6	021396-000	GASKET, FAN SCROLL	1	EA	
7	021463-000	COVER, EVAPORATOR (INCLUDES GASKET)	1	EA	
8	021589-000	SCREW	1	EA	
9	021524-000	GASKET, EVAPORATOR COVER	1	EA	
11	021473-000	FAN MOTOR RETAINER AND GROMMET	1	EA	
Not Shown	NOTE	(COMES WITH GROMMET)		EA	
13	021500-000	FAN MOTOR	1	EA	
14	021441-000	SUPPORT, L.S	1	EA	
15	021555-000	BI-METAL, DEFROST	1	EA	
16	021581-000	HARNESS, FAN EVAPORATOR, AND HEATER, BI-METAL	1	EA	
17	021442-000	GASKET	1	EA	
18	021474-000	AIR DUCT FREEZER	1	EA	

CABINET

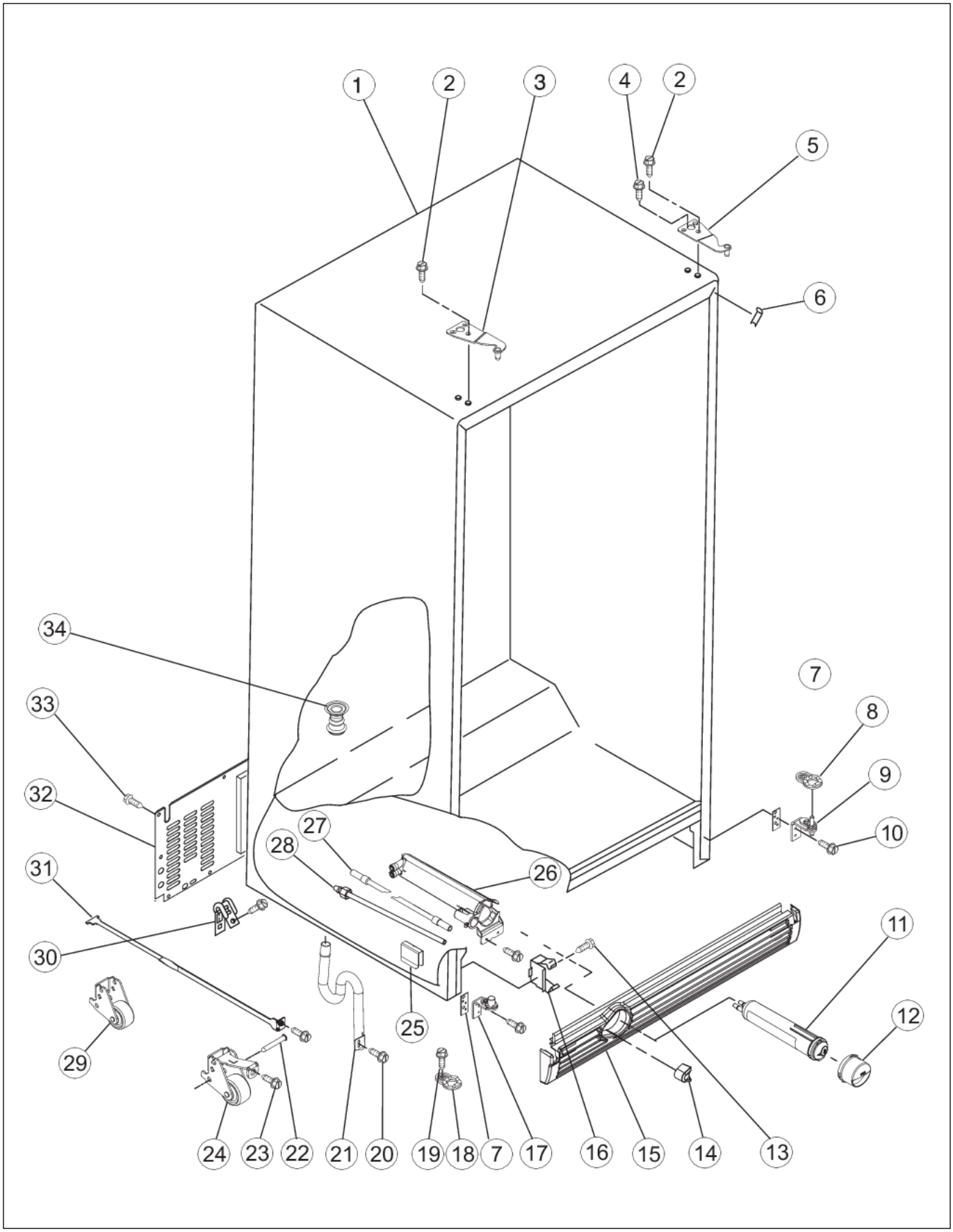
1
2
3
4
2
5
6
34
33
32
31
30
29
27
28
26
25
7
8
9
10
11
12
24
23
22
21
20
19
18
7
17
16
15
14
13

Item	Part No.	Name	Qty	Uom	NOTES
1	NON-SERVICEABLE	CABINET	1	EA	
2	021594-000	SCREW	1	EA	
3	021574-000	HINGE, TOP FC - APOLLO GRAY	1	EA	
4	037323-000	SCREW	1	EA	
5	021575-000	HINGE TOP, RC - APOLLO GRAY	1	EA	
6	021484-000	FILLER, WRAPPER - APOLLO GRAY	1	EA	
7	021468-000	SHIM	1	EA	
8	021536-000	DOOR CLOSER (RC)	1	EA	
9	021540-000	HINGE ASSEMBLY, BOTTOM - RC	1	EA	
10	021588-000	SCREW	1	EA	
11	050537-000	Filter, Water	1	EA	
12	021572-000	CAP, WATER FILTER - BLACK	1	EA	
13	021597-000	SCREW	2	EA	
14	021573-000	BUTTON, WATER FILLER - BLACK	1	EA	
15	021620-000	GRILLE, BLACK	1	EA	NO LONGER AVAILABLE
16	021393-000	CLIP, GRILLE	1	EA	
17	021539-000	HINGE ASSEMBLY, BOTTOM - FC	1	EA	
18	021537-000	DOOR CLOSER (FC)	1	EA	
19	021592-000	SCREW	1	EA	
20	021577-000	SCREW	1	EA	
21	021492-000	TUBE, EXTENSION	1	EA	
22	021642-000	PIN, ROLLER	4	EA	
23	021587-000	SCREW	2	EA	
24	021622-000	ROLLER ASSY., FRONT LEFT	1	EA	
25	021457-000	CLIP, RETAINER	4	EA	
26	021579-000	HOUSING, WATER FILLER	1	EA	
27	021553-000	TUBE, FILLER INLET	1	EA	
28	021486-000	TUBE, FILLER OUTLET	1	EA	
29	021604-000	ROLLER, REAR	2	EA	

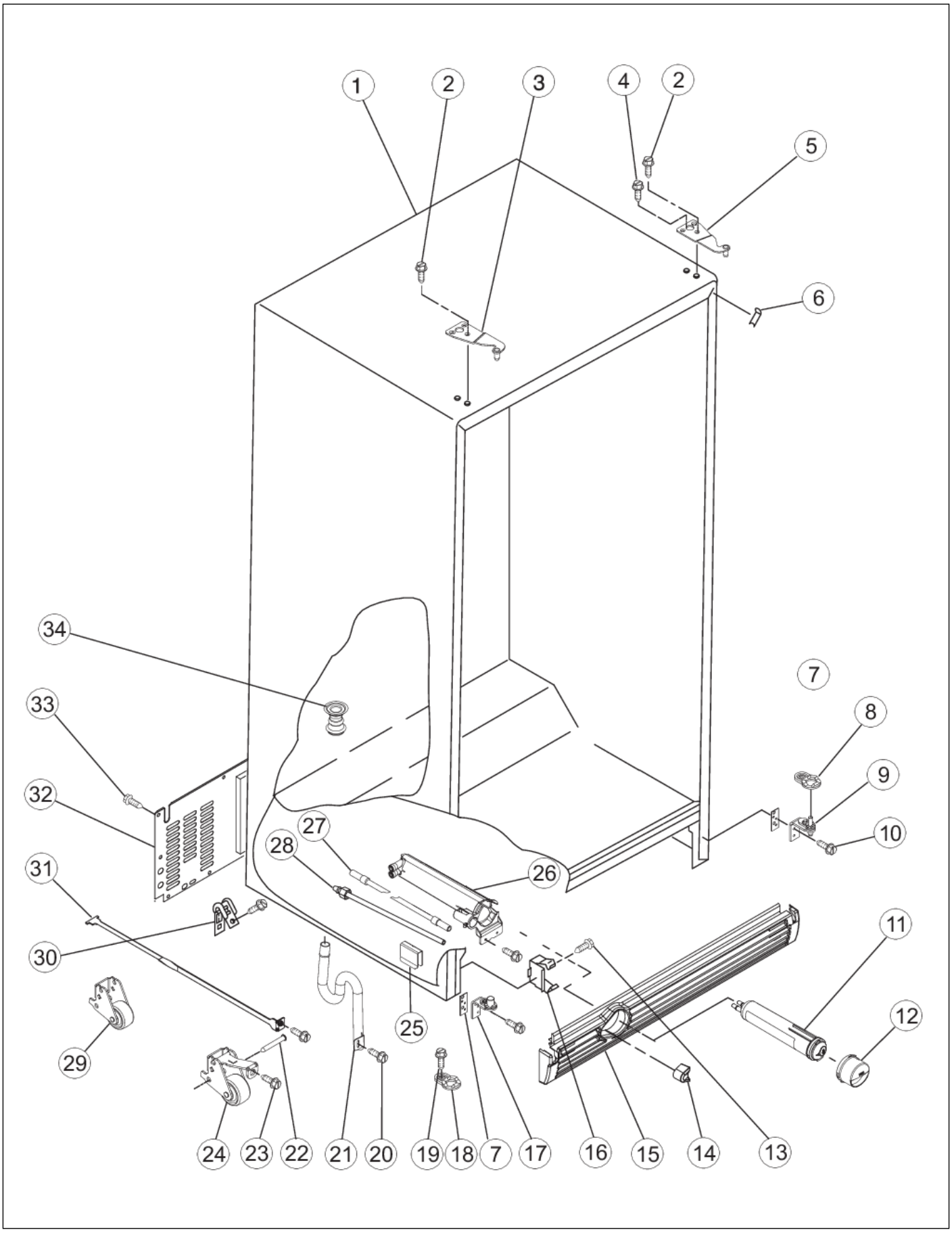
1
2
3
4
2
5
6
34
33
32
31
30
29
7
8
9
10
27
28
26
11
12
25
24
23
22
21
20
19
18
7
17
16
15
14
13

Item	Part No.	Name	Qty	Uom	NOTES
30	021383-000	CLAMP, SERVICE CORD	1	EA	
31	021624-000	STRAP, ROLLER	1	EA	
32	021462-000	COVER, UNIT	1	EA	
33	021375-000	SCREW	1	EA	
34	021529-000	DRAIN, FITTING	1	EA	
NI	021623-000	ROLLER ASSY., FRONT RIGHT	1	EA	

CONTROL

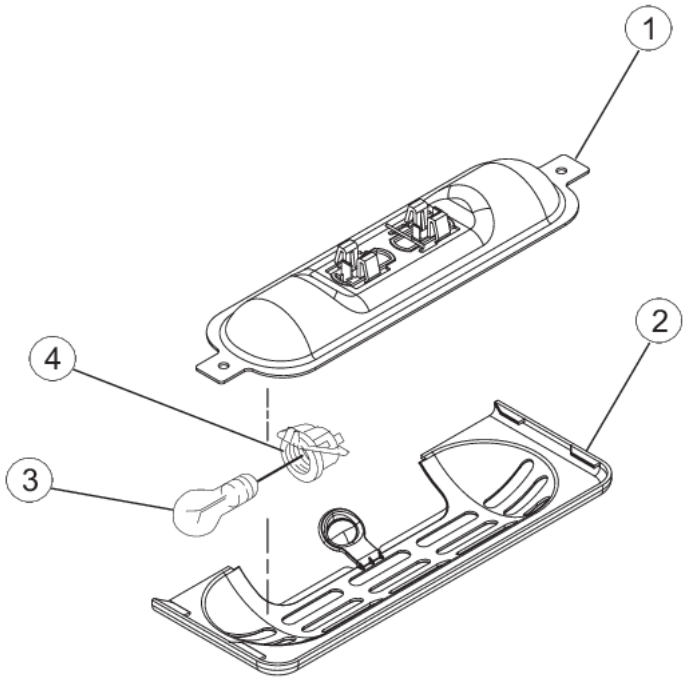

Item	Part No.	Name	Qty	Uom	NOTES
1	021482-000	HEAT SHIELD ASSEMBLY (INCLUDES SOCKET)	1	EA	
2	021466-000	LIGHT LENS,	1	EA	
3	021559-000	LIGHT BULB	1	EA	
4	021479-000	LIGHT SOCKET	1	EA	

DISPENSER

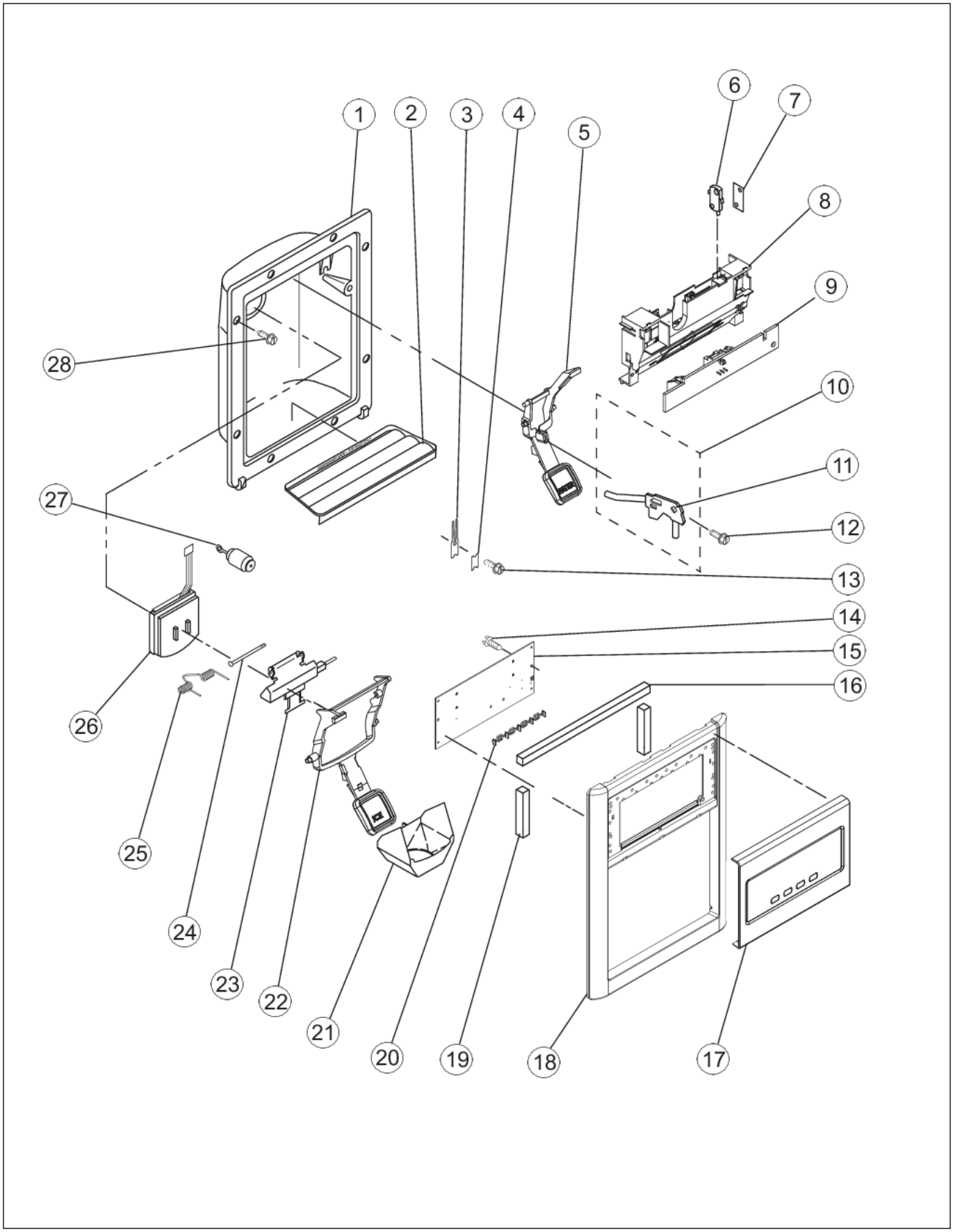

Item	Part No.	Name	Qty	Uom	NOTES
1	NON-SERVICEABLE	HOUSING, DISPENSER	1	EA	
2	021601-000	GRILLE, OVERFLOW, STAINLESS	1	EA	
3	021422-000	RETAINER, LEVER	1	EA	
4	022771-000	STRAIN RELIEF	1	EA	
5	021571-000	LEVER, WATER DISPENSER - BLACK	1	EA	
Comments for Part Num. 021571-000 bradleysappliance service@shaw.ca on Jul 4, 2016 THIS PART IS APOLLO GREY. NOT BLACK AS STATED IN DESCRIPTION. BLACK MAY NOT BE AVAILABLE ANYMORE.					
6	021401-000	SWITCH, BRACKET	1	EA	Not available online / Call for pricing and availability
7	021384-000	SPACER, SWITCH	1	EA	
8	021628-000	BRACKET, CONTROL	1	EA	
9	021643-000	LED ASSY	1	EA	
10	021446-000	WATER FITTING ASSEMBLY (INCLUDES WATER TUBE)	1	EA	
11	021528-000	BRACKET, DISPENSER	1	EA	
12	021562-000	SCREW	1	EA	
13	021382-000	SCREW	1	EA	
14	021377-000	SCREW	2	EA	
15	021631-000	CTRL-ELEK, UI	1	EA	
16	021531-000	GASKET, DISP	1	EA	
17	021640-000	FASCIA ASSY, DISP - STAINLESS	1	EA	
18	021586-000	BEZEL, DISP - STAINLESS	1	EA	
19	021619-000	GASKET, DISP	2	EA	
20	021600-000	SUPPORT, WINDOW	1	EA	
21	021406-000	GUIDE, ICE	1	EA	
22	021570-000	LEVER, ICE DISPENSER - BLACK	1	EA	

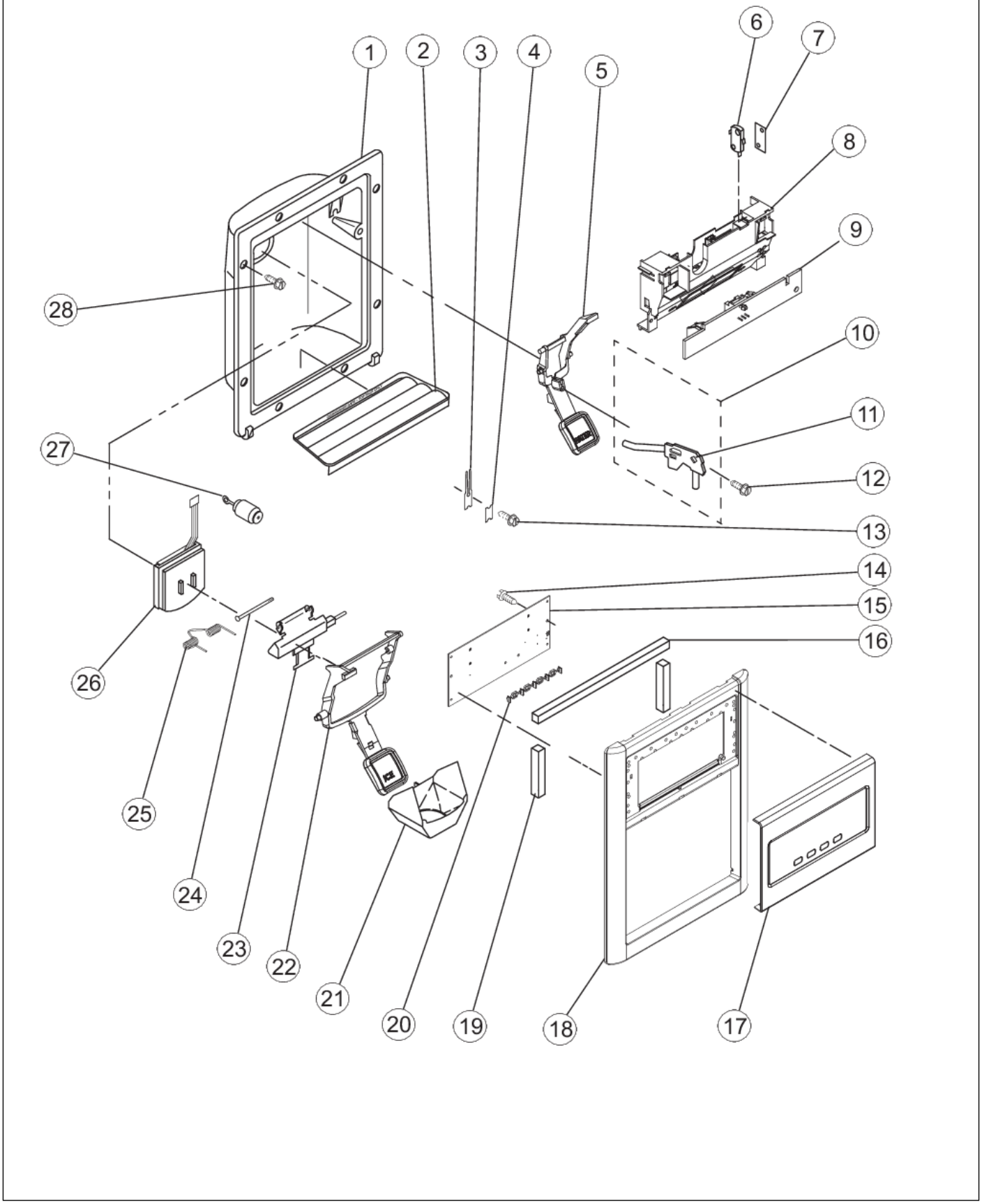
1
2
3
4
5
6
7
8
9
10
11
12
13
14
15
16
17
18
19
20
21
22
23
24
25
26
27
28

Item	Part No.	Name	Qty	Uom	NOTES
Comments for Part Num. 021570-000 bradleysappliancesservice@shaw.ca on Jul 4, 2016 THIS PART IS APOLLO GREY. NOT BLACK AS STATED IN DESCRIPTION. BLACK MAY NOT BE AVAILABLE ANYMORE.					
23	021526-000	DOOR MECHANISM ASSEMBLY	1	EA	
24	021424-000	PIN	1	EA	
25	021633-000	SPRING, TORSION	1	EA	
26	021407-000	DOOR, ICE	1	EA	
27	021443-000	SUBS TO 021526-000 - MECHANISM DELAY	1	EA	
28	021595-000	SCREW	1	EA	

FZ DOOR

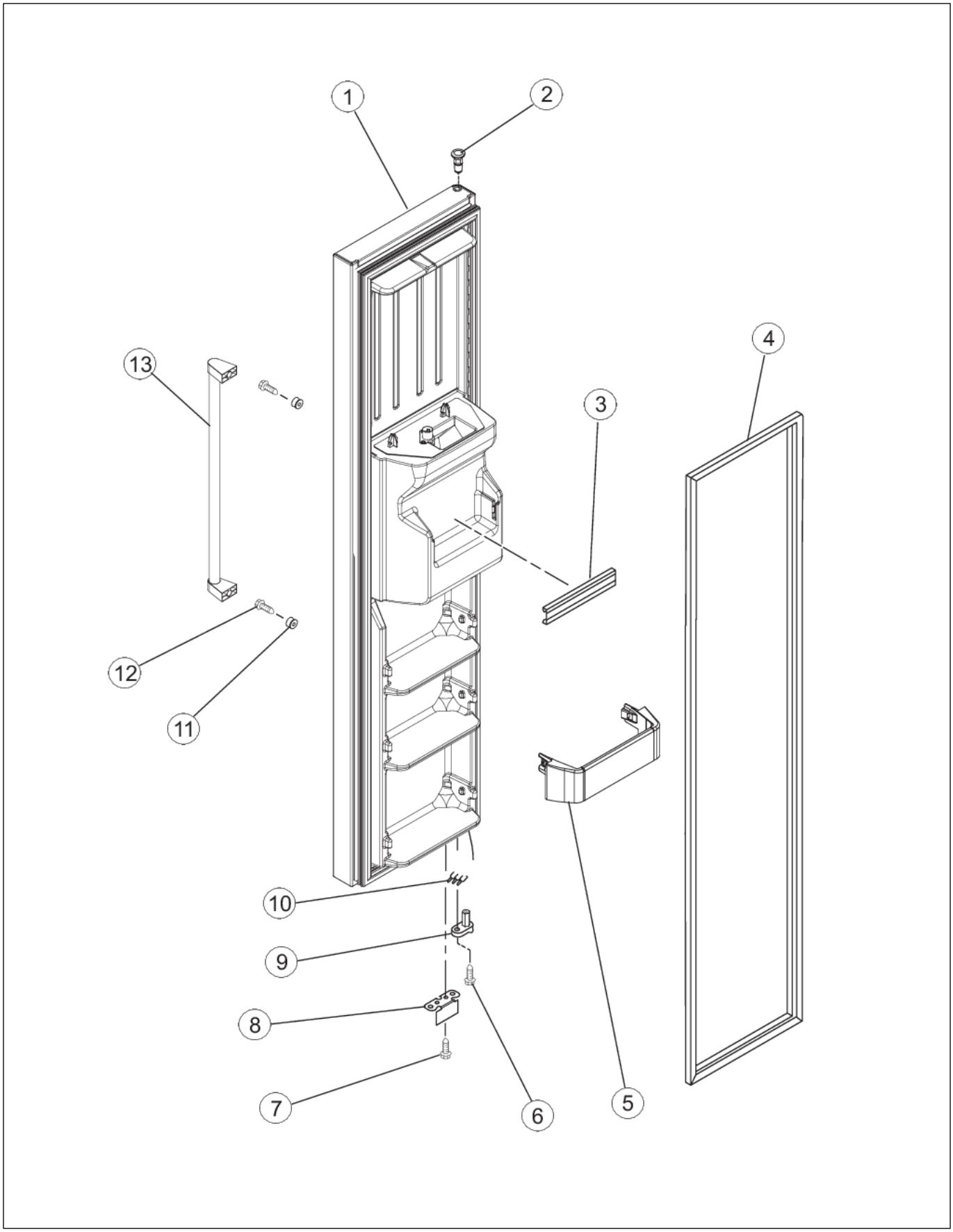

Item	Part No.	Name	Qty	Uom	NOTES
1	021599-000	FREEZER DOOR, STAINLESS (INCLUDES GASKET AND DISPENSER)	1	EA	
2	021541-000	THIMBLE, TOP	1	EA	
3	021450-000	TRIM, DOOR SHELF	1	EA	
4	031625-000	DOOR GASKET, MAGNETIC - APOLLO GREY	1	EA	
5	021469-000	SHELF BIN	3	EA	
6	021593-000	SCREW	1	EA	
7	021591-000	SCREW	1	EA	
8	021632-000	BRACKET, DOOR STOP, BLACK	1	EA	
NI	068222-000	DOOR STOP COVER	1	EA	
9	021584-000	DOOR CLOSER, UPPER CAM	1	EA	
10	021615-000	WIRE ASSY, DOOR	1	EA	
11	021567-000	STUD, HANDLE	1	EA	
12	021598-000	SCREW, HANDLE	1	EA	
13	021610-000	HANDLE, STAINLESS STEEL	1	EA	

FZ LINER

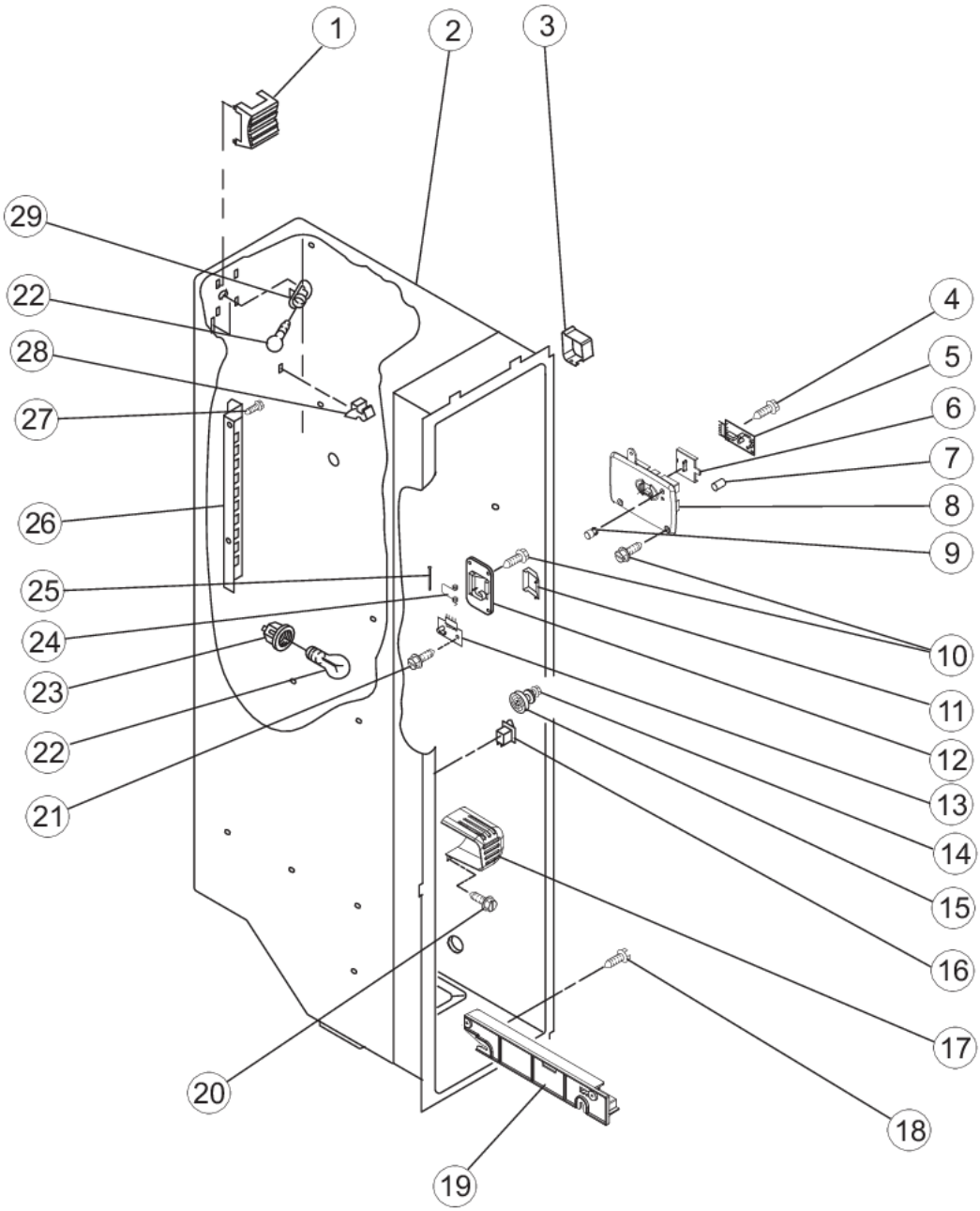
1
2
3
29
22
28
27
26
25
24
23
22
21
4
5
6
7
8
9
10
11
12
13
14
15
16
17
18
20
19

Item	Part No.	Name	Qty	Uom	NOTES
1	021425-000	LIGHT SHIELD	1	EA	
2	NON-SERVICEABLE	LINER	1	EA	
3	021522-000	SHIELD, WIRING	1	EA	
4	021377-000	SCREW	1	EA	
5	021617-000	P.C. BOARD, RECEIVER	1	EA	
6	021542-000	SLIDE, ICE MAKER SHUT OFF	1	EA	
7	021437-000	TUBE, P.C. BOARD	1	EA	
8	021605-000	COVER, RECEIVER	1	EA	
9	021435-000	LENS	1	EA	
10	021566-000	SCREW	1	EA	
11	021431-000	FLIPPER	1	EA	
12	021501-000	COVER, EMITTER	1	EA	
13	021618-000	P.C. BOARD EMITTER	1	EA	NO LONGER AVAILABLE
14	021612-000	SCREW	1	EA	
15	021603-000	STUD ASSEMBLY	1	EA	
16	021390-000	SWITCH, ROCKER ARM	1	EA	
17	021449-000	LIGHT LENS	1	EA	
18	021382-000	SCREW	2	EA	
19	021476-000	SHELF TRACK, RIGHT SIDE	1	EA	
19	021477-000	SHELF TRACK, LEFT SIDE	1	EA	
20	021594-000	SCREW	1	EA	
21	021377-000	SCREW	1	EA	
22	021621-000	LIGHT BULB	2	EA	Not available online / Call for pricing and availability
23	021395-000	SOCKET, LIGHT	1	EA	
24	021433-000	SPRING	1	EA	
25	021432-000	PIN	1	EA	
26	021428-000	LADDER, LEFT SIDE	1	EA	
26	021429-000	LADDER, RIGHT SIDE	1	EA	
27	037323-000	SCREW	6	EA	
28	021388-000	CLIP, AIR DUCT	1	EA	
29	021400-000	SOCKET	1	EA	

FZ SHELF

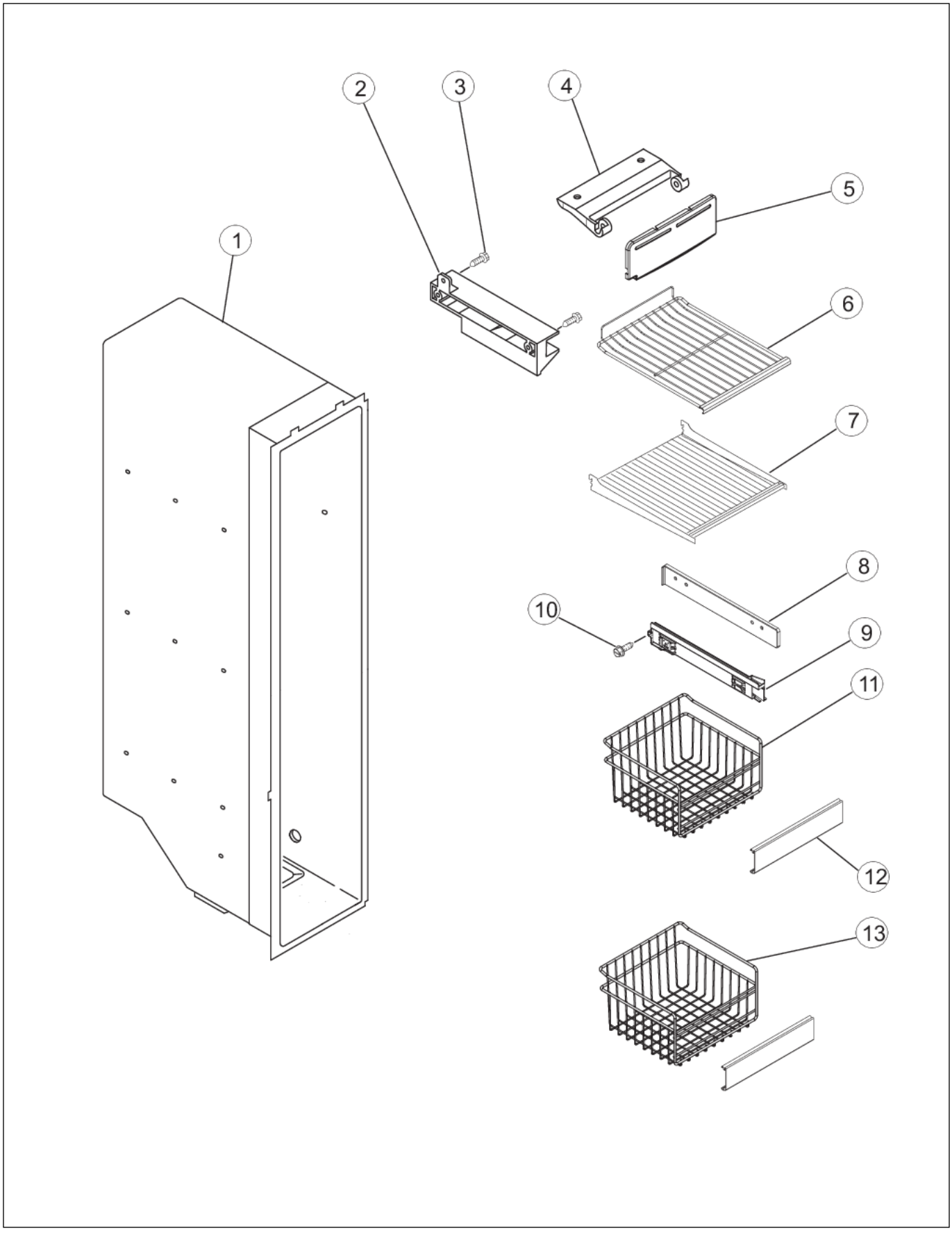

Item	Part No.	Name	Qty	Uom	NOTES
1	NON-SERVICEABLE	LINER	1	EA	
2	021448-000	SLIDE, ICE MAKER MOUNTING, RIGHT SIDE	1	EA	
2	021532-000	SLIDE, ICE MAKER MOUNTING, LEFT SIDE	1	EA	
3	037323-000	SCREW	1	EA	
4	021434-000	BRACKET, ICE MAKER COVER	1	EA	
5	021608-000	COVER, ICE MAKER	1	EA	
6	021465-000	SHELF ASSEMBLY, CANTILEVER	2	EA	
7	021493-000	SHELF, FIXED	1	EA	
8	021475-000	SPACER, SLIDE	2	EA	
9	021513-000	GLIDE ASSEMBLY, BASKET, RIGHT SIDE	1	EA	
9	021514-000	GLIDE ASSEMBLY, BASKET, LEFT SIDE	1	EA	
10	021382-000	SCREW	1	EA	
11	021471-000	BASKET, DEEP	2	EA	
12	021489-000	FRONT-BASKET	1	EA	
13	021472-000	BASKET, LOWER	1	EA	

ICE MAKER

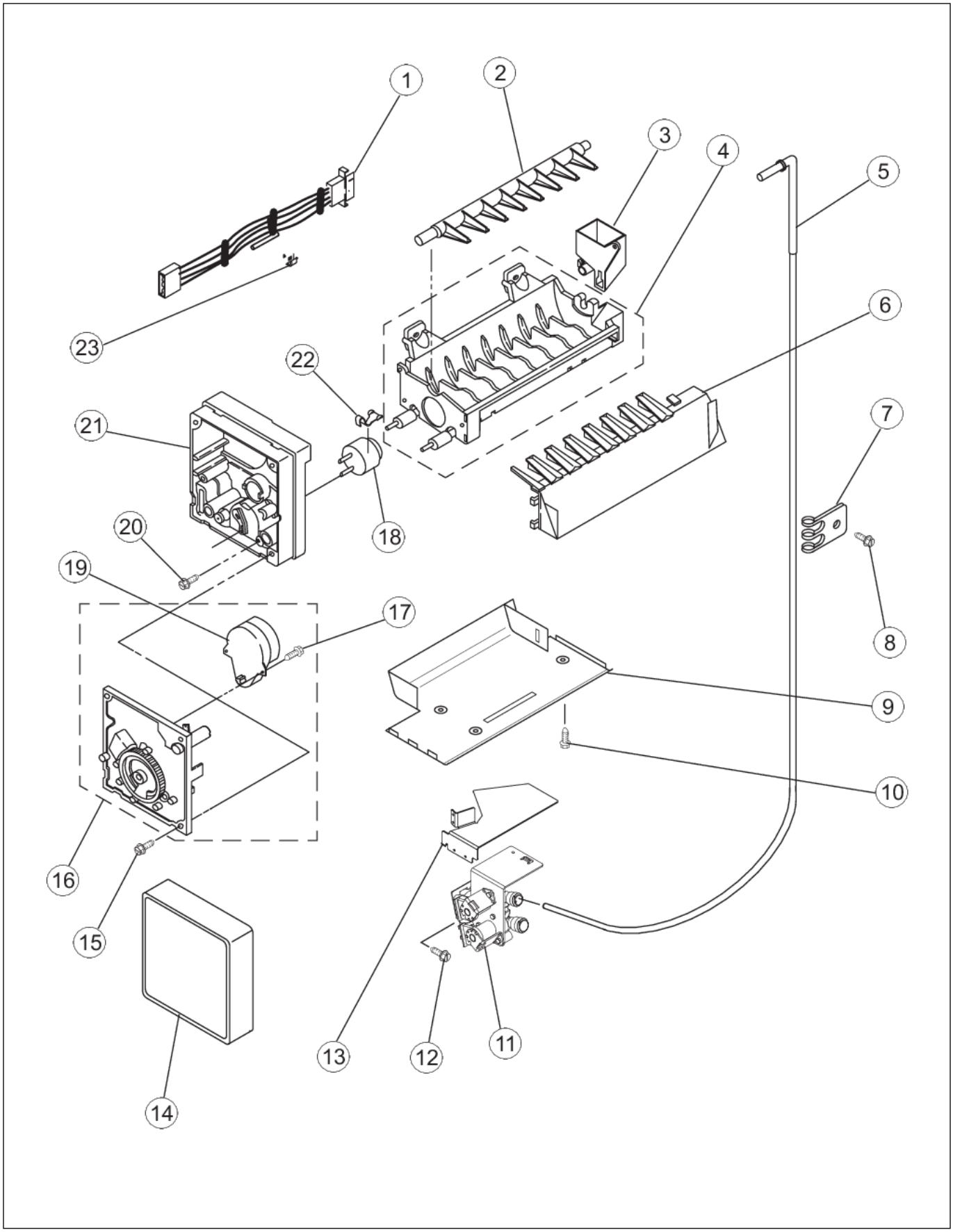

Item	Part No.	Name	Qty	Uom	NOTES
1	021410-000	HARNESS, WIRING	1	EA	
2	011582-000	ICE EJECTOR	1	EA	
3	021530-000	CUP, WATER FILL	1	EA	Not available online / Call for pricing and availability
4	011580-000	MOLD & HEATER ASSEMBLY	1	EA	
5	021521-000	FITTING, WATER TUBE	1	EA	
6	021426-000	ICE STRIPER	1	EA	Not available online / Call for pricing and availability
7	021445-000	TUBE CLIP	1	EA	
8	021375-000	SCREW	1	EA	
9	021523-000	BRACKET, ICEMAKER MOUNTING	1	EA	
10	037323-000	SCREW	1	EA	
11	021630-000	WATER VALVE ASM	1	EA	
12	021588-000	SCREW	1	EA	
13	021627-000	SHIELD, VALVE ASSY	1	EA	
14	021404-000	COVER	1	EA	Not available online / Call for pricing and availability
15	011579-000	SCREW	1	EA	
16	021644-000	MODULE ASSEMBLY (INCLUDES MOTOR AND SCREW)	1	EA	Not available online / Call for pricing and availability
17	011592-000	SCREW	1	EA	
18	021387-000	THERMOSTAST	1	EA	
19	021645-000	REAR FOAM 30 AF AR 27.5" W	1	EA	
20	011587-000	SCREW	1	EA	
21	011584-000	SUPPORT, HOUSING	1	EA	
22	011585-000	RETAINER, THERMOSTAT	1	EA	
23	PR120059	CLIP, FUSE	1	EA	NO LONGER AVAILABLE
NI	021611-000	ICEMAKER ASSEMBLY	1	EA	

ICE MOTOR

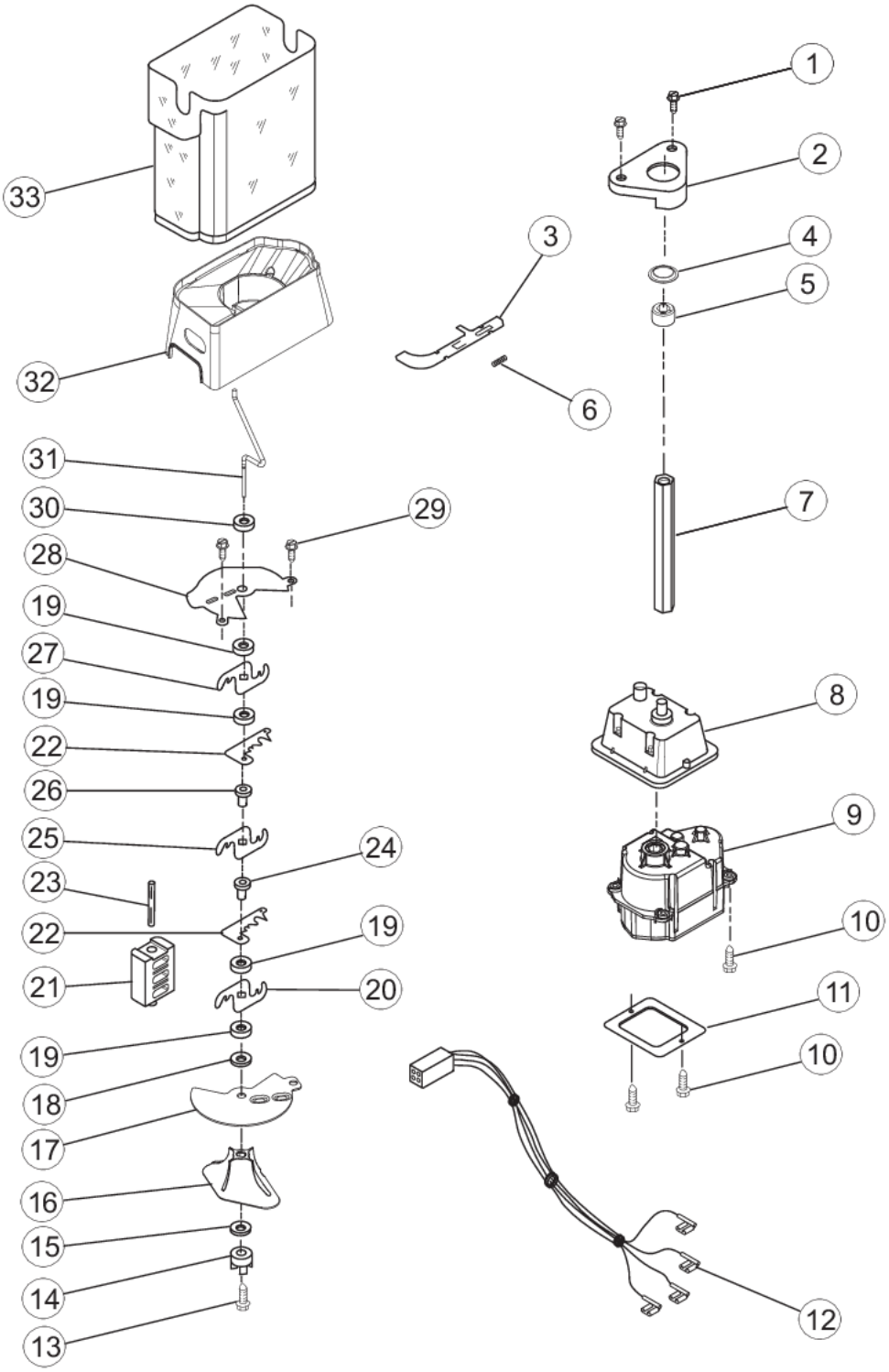
1
2
3
4
5
6
7
8
9
10
11
10
12
33
32
31
30
29
28
19
27
19
22
26
25
24
23
22
19
21
20
19
18
17
16
15
14
13

Item	Part No.	Name	Qty	Uom	NOTES
1	021564-000	SCREW	2	EA	
2	021418-000	HOLDER	1	EA	
3	021549-000	LATCH, BIN	1	EA	
4	021430-000	SEAL	1	EA	
5	021543-000	SLEEVE, COUPLING	1	EA	
6	021427-000	SPRING, LATCH	1	EA	
7	021416-000	DRIVE SHAFT	1	EA	
8	021556-000	ENCLOSURE, MOTOR	1	EA	
9	021561-000	DISPENSER, MOTOR	1	EA	
10	021564-000	SCREW	3	EA	
11	021447-000	COVER	1	EA	
12	021616-000	WIRE HARNESS, IDI MOTOR	1	EA	
13	021565-000	SCREW	1	EA	
14	021417-000	COUPLING	1	EA	
15	021436-000	WASHER, COUPLING	1	EA	
16	021546-000	WIPER	1	EA	
17	021548-000	DIVIDER-CHAMBER	1	EA	
18	021379-000	WASHER, PLAIN	1	EA	
19	021392-000	SPACER, FLAT	4	EA	
20	021496-000	BLADE, ROTARY	1	EA	
21	021545-000	BLOCK, BLADE	1	EA	
22	021495-000	BLADE, FIXED	1	EA	
23	021378-000	ROLL PIN	1	EA	
24	021391-000	SPACER, STEP	1	EA	
25	021497-000	BLADE, ROTARY	1	EA	
26	021391-000	SPACER, STEP	1	EA	
27	021498-000	BLADE, ROTARY	1	EA	
28	021547-000	COVER, CRUSHER	1	EA	
29	021562-000	SCREW	2	EA	
30	021499-000	WASHER	1	EA	
31	021550-000	AUGER	1	EA	
32	021582-000	CRUSHER BIN	1	EA	
33	021454-000	ICE BIN	1	EA	

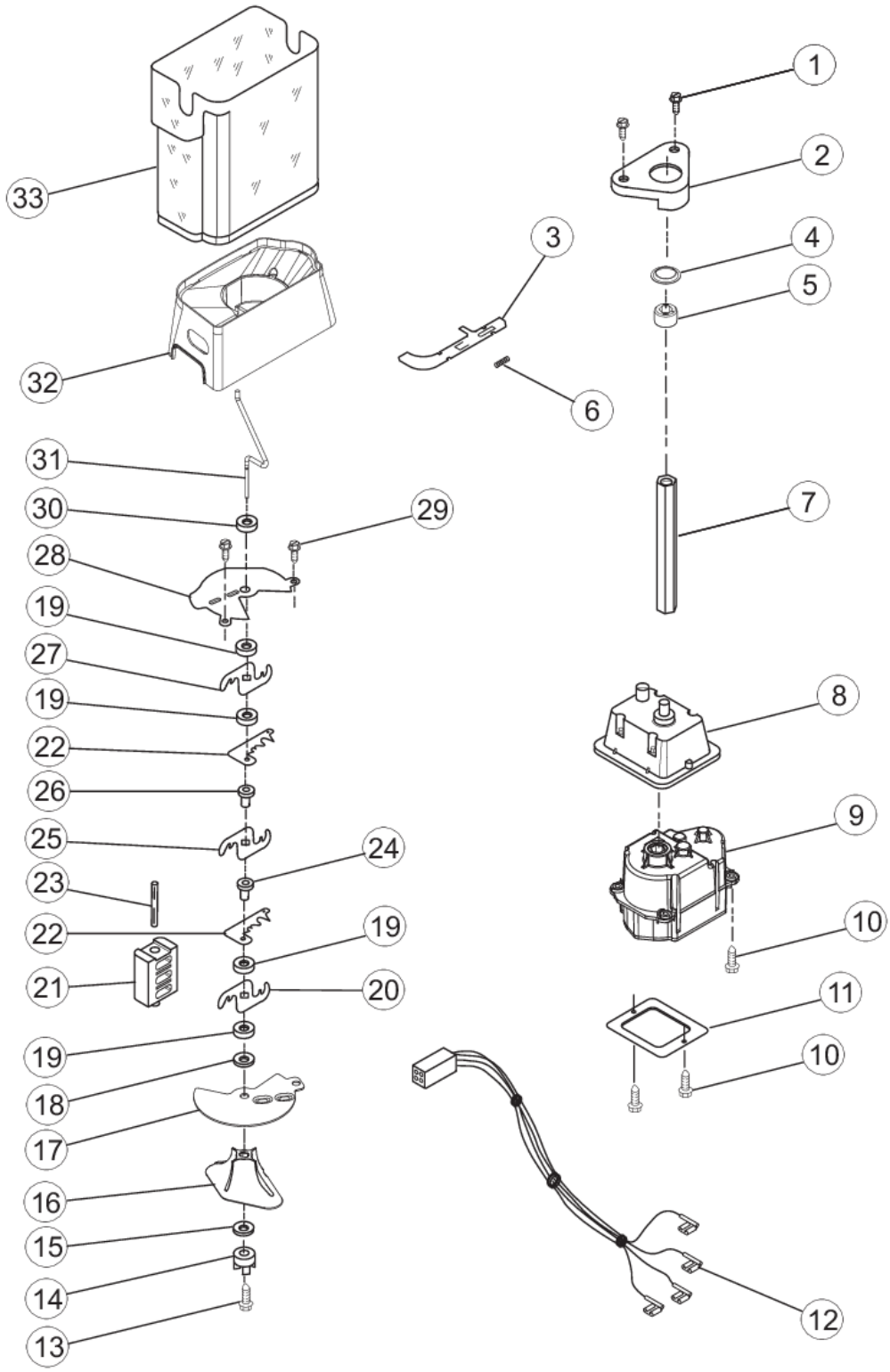
1
2
3
4
5
6
7
8
9
10
11
10
12
33
32
31
30
29
28
19
27
19
22
26
25
24
23
22
19
21
20
19
18
17
16
15
14
13

Item	Part No.	Name	Qty	Uom	NOTES
NI	021583-000	ICE CONTAINER (COMPLETE)	1	EA	

REF DOOR

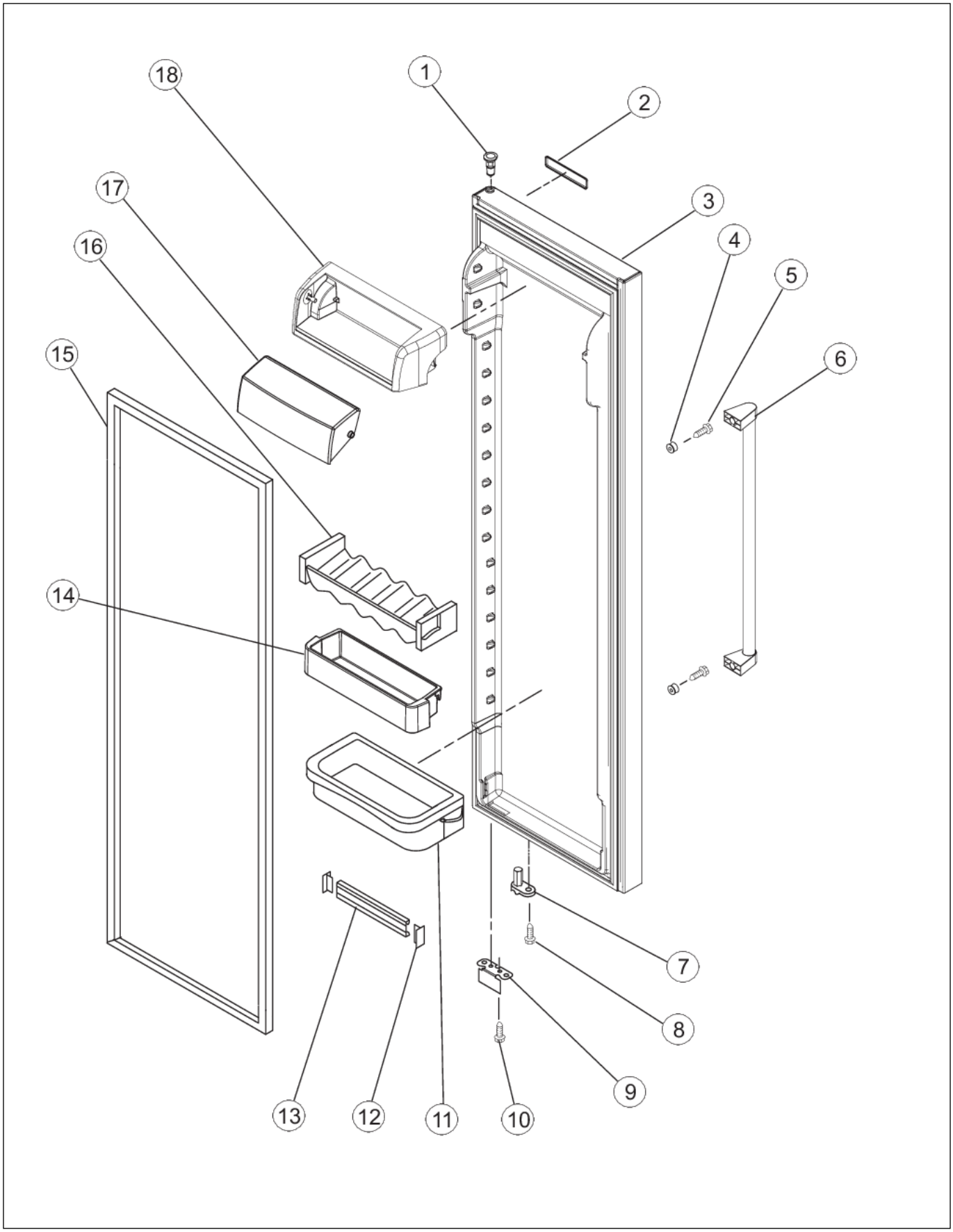

Item	Part No.	Name	Qty	Uom	NOTES
1	021541-000	THIMBLE, TOP	1	EA	
2	021569-000	NAMEPLATE (CONTACT VIKING)	1	EA	
3	021576-000	REFRIGERATOR DOOR, STAINLESS (INCLUDES GASKET)	1	EA	
4	021567-000	STUD, HANDLE	1	EA	
5	021598-000	SCREW, HANDLE	1	EA	
6	021610-000	HANDLE, STAINLESS STEEL	1	EA	
7	021535-000	DOOR CLOSER, UPPER CAM	1	EA	
8	021591-000	SCREW	1	EA	
9	021534-000	BRACKET, DOOR STOP - BLACK	1	EA	
NI	068222-000	DOOR STOP COVER	1	EA	
10	021593-000	SCREW	1	EA	
11	021480-000	DOOR BIN	3	EA	
12	021397-000	PLUG, TRIM	1	EA	
13	021440-000	TRIM, SHELF	1	EA	
14	021491-000	DOOR BIN, SHALLOW	1	EA	
15	021560-000	DOOR GASKET, MAGNETIC - APOLLO GREY	1	EA	
16	021483-000	CADDY, CAN	1	EA	
17	021494-000	DAIRY DOOR	1	EA	
18	021481-000	DAIRY COMPARTMENT	1	EA	

REF LINER

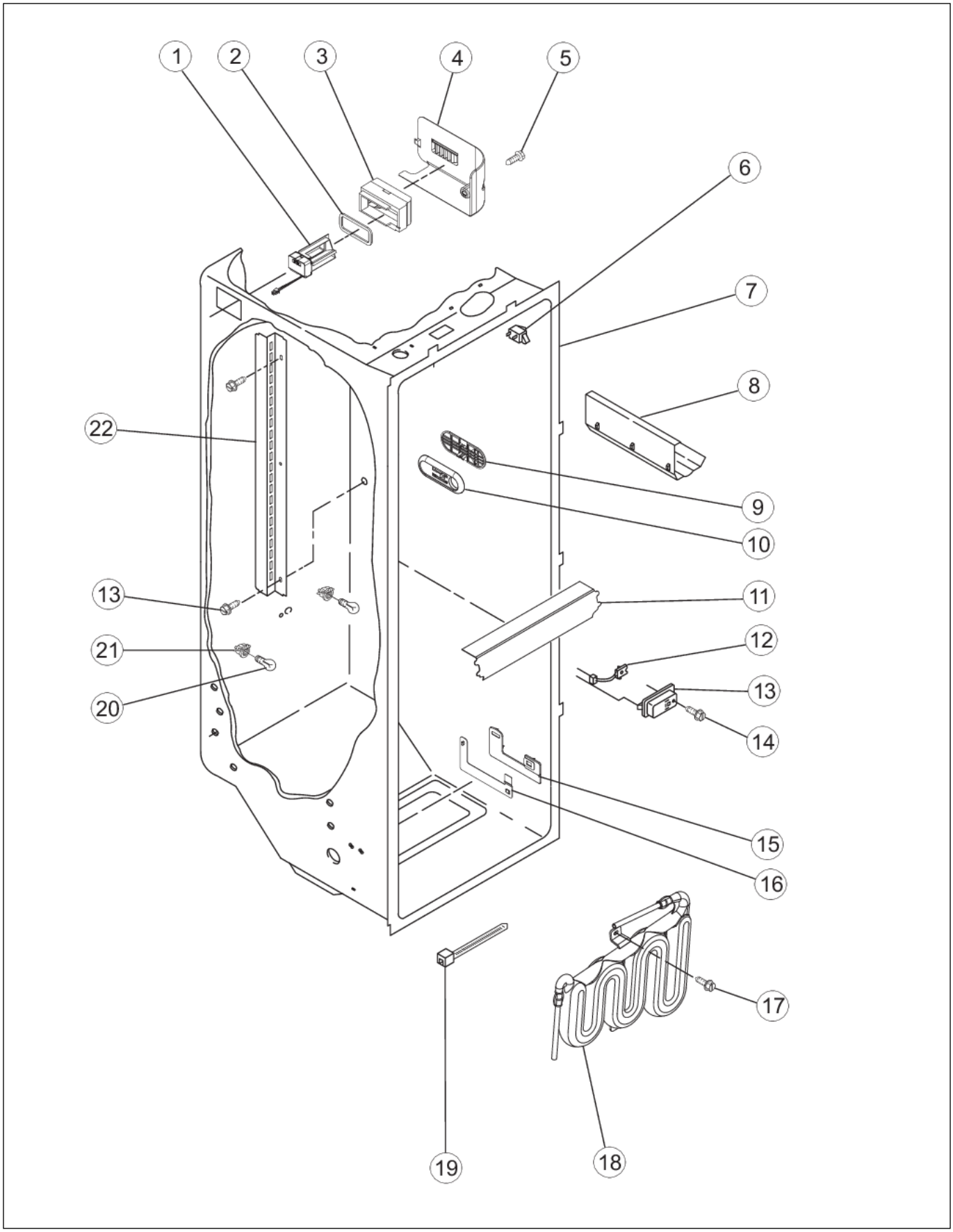

Item	Part No.	Name	Qty	Uom	NOTES
1	021451-000	AIR BAFFLE	1	EA	
2	021527-000	GASKET, AIR BAFFLE	1	EA	
3	021490-000	AIR DIFFUSER ASSEMBLY	1	EA	
4	021461-000	COVER, AIR BAFFLE	1	EA	
5	021375-000	SCREW	1	EA	
6	PR110008	SWITCH, ROCKER ARM	1	EA	
7	NON-SERVICEABLE	LINER	1	EA	
8	021405-000	RACK, WINE & EGG	1	EA	
9	021634-000	SLIDE, DOOR CONTROL	1	EA	
10	021512-000	HOUSING, DOOR CONTROL	1	EA	
11	021470-000	LIGHT LENS	1	EA	
12	021413-000	THERMISTOR	1	EA	
13	021544-000	COVER, THERMISTOR	1	EA	
14	037323-000	SCREW	1	EA	
15	021467-000	ESCUTCHEON, MEAT PAN CONTROL	1	EA	
16	021455-000	SLIDE MEAT PAN CONTROL	1	EA	
17	021374-000	SCREW	1	EA	
18	021538-000	RESERVOIR	1	EA	
19	021444-000	STRAP	1	EA	
20	021621-000	LIGHT BULB	1	EA	Not available online / Call for pricing and availability
21	021400-000	SOCKET	1	EA	
22	021552-000	LADDER, SHELF	2	EA	

REF SHELF

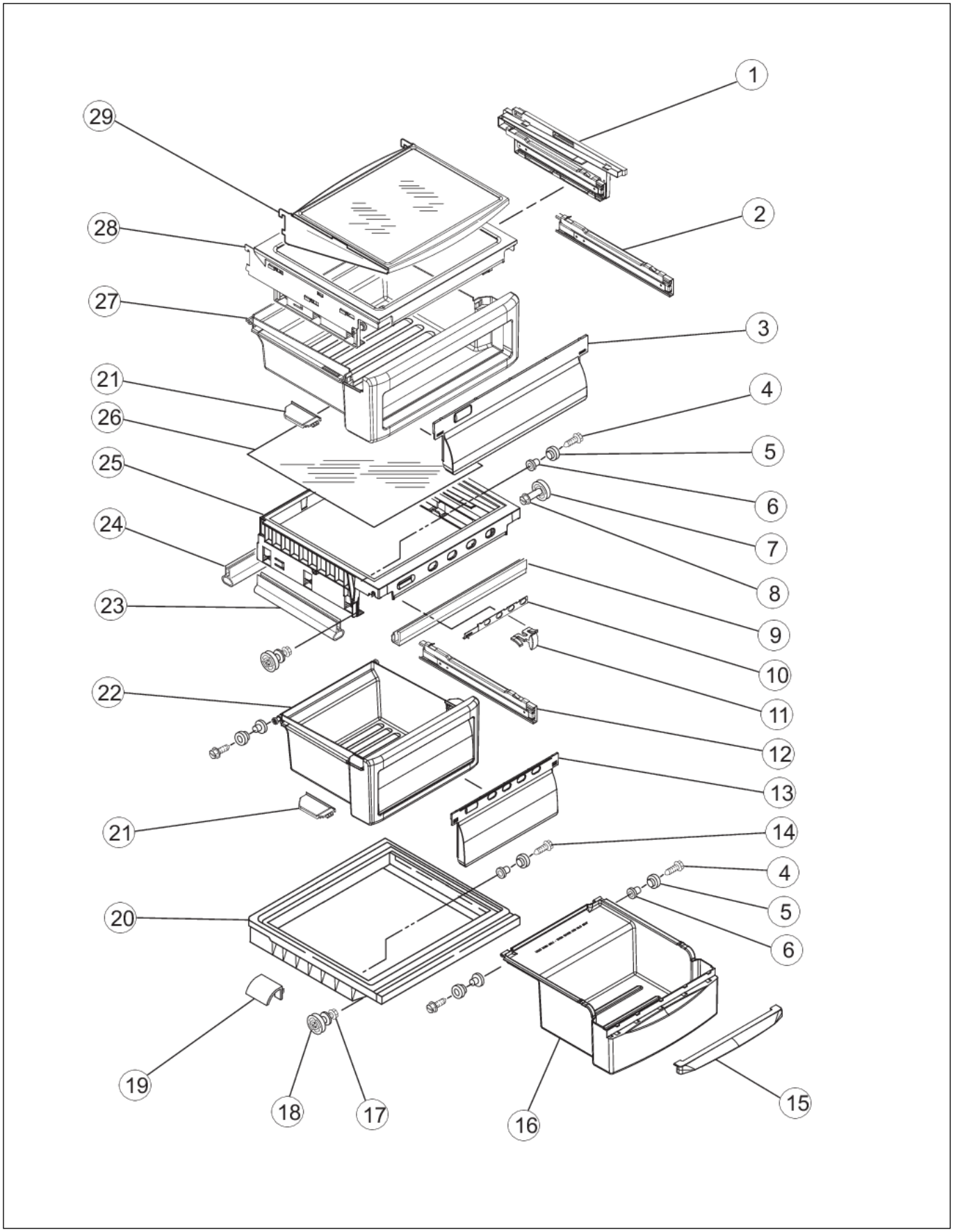
1
29
2
28
27
3
21
4
26
5
25
6
24
7
8
23
9
10
22
11
12
13
21
14
4
20
5
6
19
18
17
16
15

Item	Part No.	Name	Qty	Uom	NOTES
1	021519-000	SUPPORT ASSEMBLY, RIGHT SIDE	1	EA	
1	021520-000	SUPPORT ASSEMBLY, LEFT SIDE	1	EA	
2	021517-000	GLIDE ASSEMBLY, RIGHT SIDE	1	EA	
2	021518-000	GLIDE ASSEMBLY, LEFT SIDE	1	EA	
3	021503-000	WINDOW, SNACK PAN	1	EA	
4	021380-000	SCREW	1	EA	
5	PR140009	ROLLER BASKET 4318078	1	EA	
6	PR140010	EYELET, ROLLER	1	EA	
7	021603-000	STUD ASSEMBLY	1	EA	
8	021612-000	SCREW	1	EA	
9	021510-000	GASKET (FRONT)	1	EA	
10	021507-000	SLIDE, HUMIDITY	1	EA	
11	021506-000	BUTTON, HUMIDITY	1	EA	
12	021515-000	GLIDE ASSEMBLY, CRISPER PAN RIGHT SIDE	1	EA	
12	021516-000	GLIDE ASSEMBLY, CRISPER PAN LEFT SIDE	1	EA	
13	021502-000	WINDOW, CRISPER PAN	1	EA	
14	021376-000	SCREW	1	EA	
15	021439-000	HANDLE	1	EA	
16	021639-000	MEAT PAN	1	EA	
17	021613-000	SCREW	1	EA	
18	021602-000	STUD ASSEMBLY	1	EA	
19	021464-000	DEFLECTOR	1	EA	
20	021438-000	COVER, MEAT PAN	1	EA	
21	021504-000	CAP, SNACK PAN, RIGHT SIDE	1	EA	
21	021505-000	CAP, SNACK PAN, LEFT SIDE	1	EA	
22	021636-000	CRISPER PAN	1	EA	
23	021511-000	GASKET, SIDE	2	EA	
24	021509-000	GASKET (REAR)	1	EA	
25	021635-000	COVER, CRISPER	1	EA	
26	021508-000	GLASS, COVER	1	EA	
27	021638-000	SNACK PAN	1	EA	

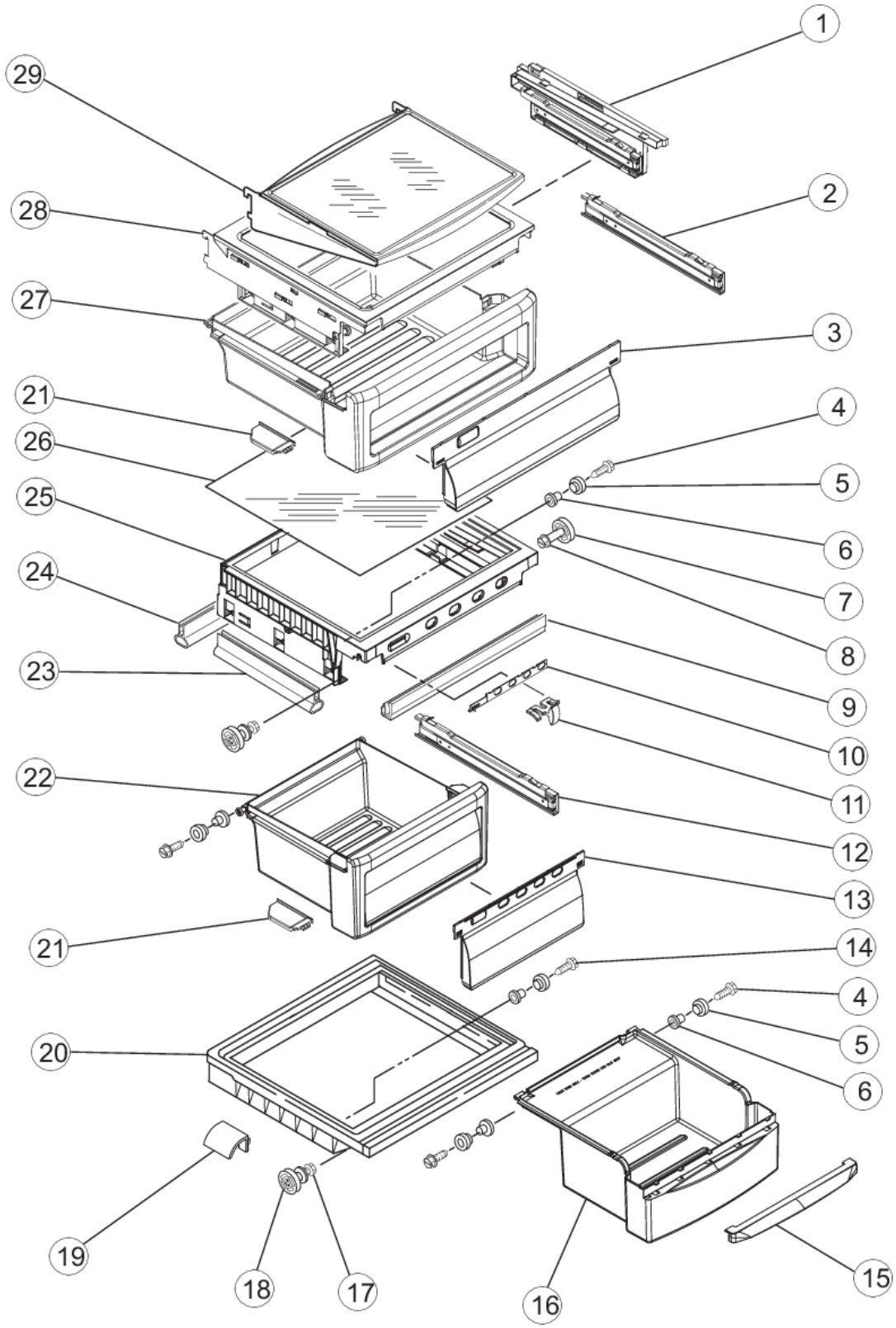
1
29
2
28
27
3
21
4
26
5
25
6
24
7
8
23
9
10
22
11
12
13
21
14
4
20
5
6
19
18
17
16
15

Item	Part No.	Name	Qty	Uom	NOTES
28	021637-000	SHELF, SNACK PAN	1	EA	
29	021641-000	SHELF ASSEMBLY, CANTILEVER	2	EA	
NI	039197-000	MEAT PAN CLEAR FLIP ADVISOR	1	EA	

UNIT

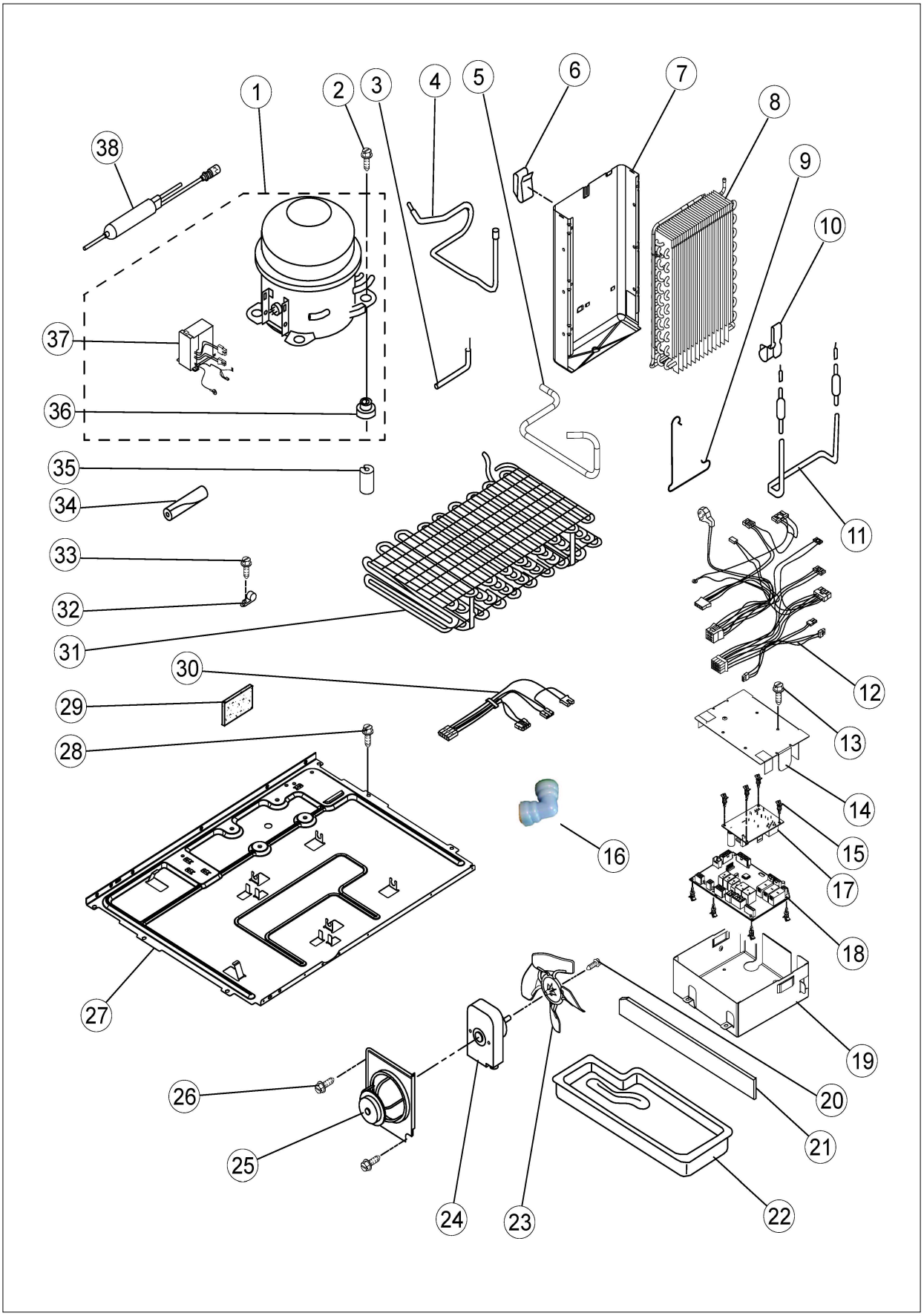
1
2
3
4
5
6
7
8
9
10
11
12
13
14
15
16
17
18
19
20
21
22
23
24
25
26
27
28
29
30
31
32
33
34
35
36
37
38

Item	Part No.	Name	Qty	Uom	NOTES
1	020968-000	COMPRESSOR	1	EA	
2	021389-000	GROMMET & SCREW	1	EA	
3	021558-000	TUBE, PROCESS	1	EA	
4	021456-000	TUBE SUCTION	1	EA	
5	021607-000	TUBE, DISCHARGE	1	EA	
6	021394-000	CLIP, HEAT SHIELD	1	EA	
7	021487-000	HEAT SHIELD	1	EA	
8	021414-000	EVAPORATOR	1	EA	
9	021399-000	CLAMP	1	EA	
10	021525-000	CLIP	1	EA	
11	021557-000	HEATER, DEFROST	1	EA	
12	021580-000	HARNESS, MAIN CONTROL - INCLUDES SUPPLY CORD	1	EA	
13	021563-000	SCREW, CTRL	2	EA	
14	021626-000	COVER, HOUSING	1	EA	
15	021478-000	SPACER	5	EA	
16	021554-000	CONNECTOR, WATER TUBE (BLUE L-SHAPE)	1	EA	
17	021578-000	CTRL-ELEK, GEMINI	1	EA	
18	021629-000	CTRL-ELEK, MAIN	1	EA	
19	021625-000	HOUSING, CONTROL BOARD	1	EA	
20	021589-000	SCREW	1	EA	
21	021458-000	EXTENSION, AIR BAFFLE	1	EA	
22	021460-000	TRAY, EVAPORATOR	1	EA	NO LONGER AVAILABLE
23	021585-000	FAN, BLADE	1	EA	
24	021415-000	FAN, MOTOR	1	EA	
25	021488-000	FAN, MOTOR BRACKET	1	EA	
26	021590-000	SCREW	1	EA	
27	021533-000	BASEPLATE	1	EA	
28	037323-000	SCREW	6	EA	
29	021402-000	INSULATION, SOUND	1	EA	
30	021411-000	UNIT HARNESS	1	EA	
31	021614-000	CONDENSER ASSEMBLY	1	EA	

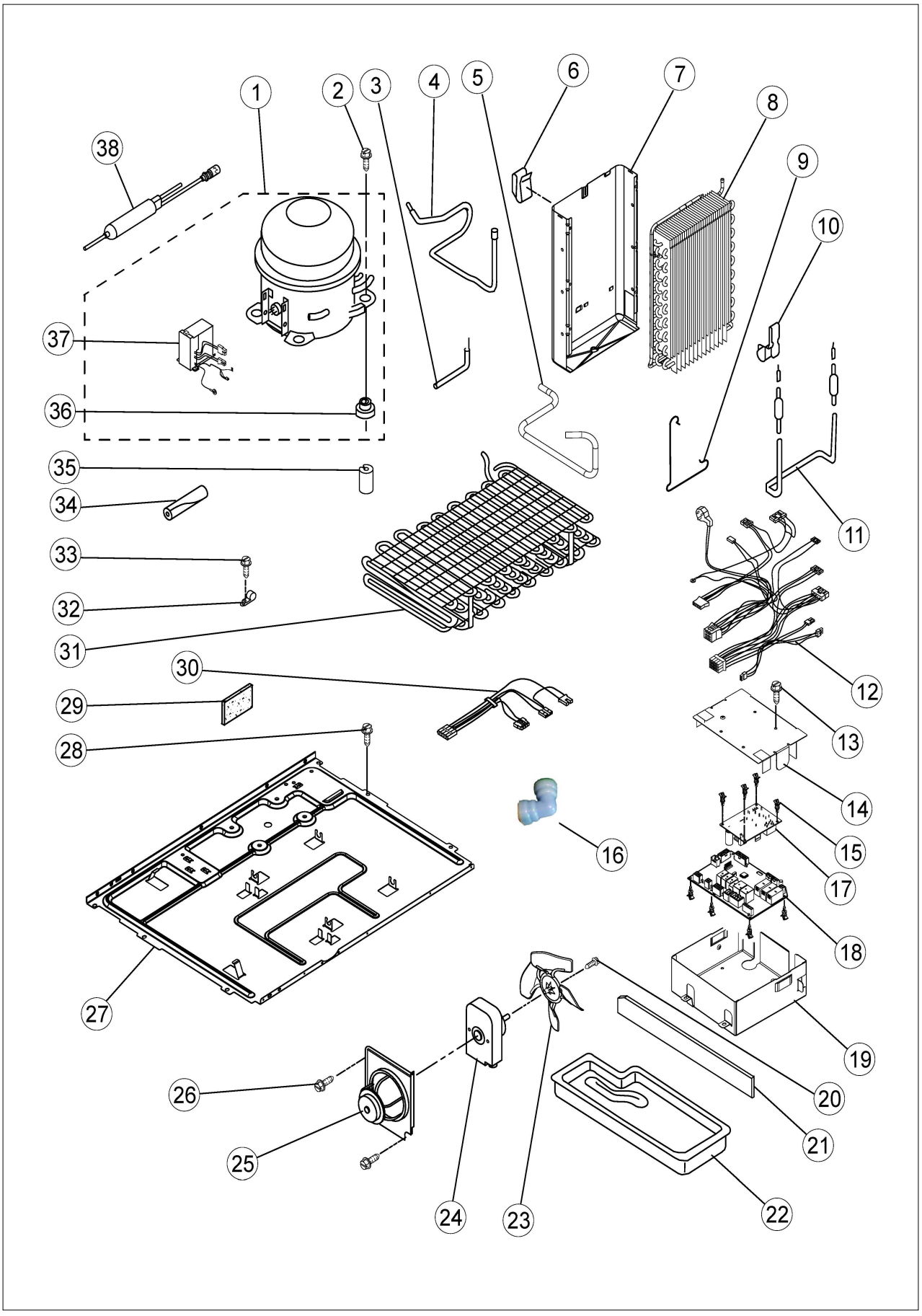
1
2
3
4
5
6
7
8
9
10
11
12
13
14
15
16
17
18
19
20
21
22
23
24
25
26
27
28
29
30
31
32
33
34
35
36
37
38

Item	Part No.	Name	Qty	Uom	NOTES
32	021409-000	CLAMP, CABLE	1	EA	
33	021596-000	SCREW	1	EA	
34	021398-000	SLEEVE	1	EA	
35	021551-000	GROMMET, CONDENSER	4	EA	
36	021389-000	GROMMET & SCREW	4	EA	
37	021609-000	INVERTER BOX	1	EA	
38	021799-000	DRIER	1	EA	

Appendix A:Pages Index

AIR FLOW 1
CABINET 2
CONTROL 3
DISPENSER 4
FZ DOOR 5
FZ LINER 6
FZ SHELF 7
ICE MAKER 8
ICE MOTOR 9
REF DOOR 10
REF LINER 11
REF SHELF 12
UNIT 13

Appendix B:Parts Index

011579-000 8
011580-000 8
011582-000 8
011584-000 8
011585-000 8
011587-000 8
011592-000 8
020968-000 13
021374-000 11
021375-000 . . . . . 2, 8, 11
021376-000 12
021377-000 . . . . . 4, 6, 6
021378-000 9
021379-000 9
021380-000 12
021382-000 . . . . . 4, 6, 7
021383-000 2
021384-000 4
021387-000 8
021388-000 6
021389-000 . . . . . 13, 13
021390-000 6
021391-000 . . . . . 9, 9
021392-000 9
021393-000 2
021394-000 13
021395-000 6
021396-000 1
021397-000 10
021398-000 13
021399-000 13
021400-000 . . . . . 6, 11
021401-000 4
021402-000 13
021404-000 8
021405-000 11
021406-000 4
021407-000 4
021408-000 1
021409-000 13
021410-000 8
021411-000 13
021413-000 11
021414-000 13
021415-000 13
021416-000 9
021417-000 9
021418-000 9
021422-000 4
021424-000 4
021425-000 6
021426-000 8
021427-000 9
021428-000 6
021429-000 6
021430-000 9
021431-000 6
021432-000 6
021433-000 6
021434-000 7
021435-000 6
021436-000 9
021437-000 6
021438-000 12
021439-000 12
021440-000 10
021441-000 1
021442-000 1
021443-000 4
021444-000 11
021445-000 8
021446-000 4
021447-000 9
021448-000 7
021449-000 6
021450-000 5
021451-000 11
021453-000 1
021454-000 9
021455-000 11
021456-000 13

021457-000 2
021458-000 13
021459-000 1
021460-000 13
021461-000 11
021462-000 2
021463-000 1
021464-000 12
021465-000 7
021466-000 3
021467-000 11
021468-000 2
021469-000 5
021470-000 11
021471-000 7
021472-000 7
021473-000 1
021474-000 1
021475-000 7
021476-000 6
021477-000 6
021478-000 13
021479-000 3
021480-000 10
021481-000 10
021482-000 3
021483-000 10
021484-000 2
021486-000 2
021487-000 13
021488-000 13
021489-000 7
021490-000 11
021491-000 10
021492-000 2
021493-000 7
021494-000 10
021495-000 9
021496-000 9
021497-000 9
021498-000 9
021499-000 9
021500-000 1
021501-000 6
021502-000 12
021503-000 12
021504-000 12
021505-000 12
021506-000 12
021507-000 12
021508-000 12
021509-000 12
021510-000 12
021511-000 12
021512-000 11
021513-000 7
021514-000 7
021515-000 12
021516-000 12
021517-000 12
021518-000 12
021519-000 12
021520-000 12
021521-000 8
021522-000 6
021523-000 8
021524-000 1
021525-000 13
021526-000 4
021527-000 11
021528-000 4
021529-000 2
021530-000 8
021531-000 4
021532-000 7
021533-000 13
021534-000 10
021535-000 10
021536-000 2
021537-000 2
021538-000 11
021539-000 2

021540-000 2
021541-000 . . . . . 5, 10
021542-000 6
021543-000 9
021544-000 11
021545-000 9
021546-000 9
021547-000 9
021548-000 9
021549-000 9
021550-000 9
021551-000 13
021552-000 11
021553-000 2
021554-000 13
021555-000 1
021556-000 9
021557-000 13
021558-000 13
021559-000 3
021560-000 10
021561-000 9
021562-000 . . . . . 4, 9
021563-000 13
021564-000 . . . . . 9, 9
021565-000 9
021566-000 6
021567-000 . . . . . 5, 10
021569-000 10
021570-000 4
021571-000 4
021572-000 2
021573-000 2
021574-000 2
021575-000 2
021576-000 10
021577-000 2
021578-000 13
021579-000 2
021580-000 13
021581-000 1
021582-000 9
021583-000 9
021584-000 5
021585-000 13
021586-000 4
021587-000 2
021588-000 . . . . . 2, 8
021589-000 . . . . . 1, 13
021590-000 13
021591-000 . . . . . 5, 10
021592-000 2
021593-000 . . . . . 5, 10
021594-000 . . . . . 2, 6
021595-000 4
021596-000 13
021597-000 2
021598-000 . . . . . 5, 10
021599-000 5
021600-000 4
021601-000 4
021602-000 12
021603-000 . . . . . 6, 12
021604-000 2
021605-000 6
021607-000 13
021608-000 7
021609-000 13
021610-000 . . . . . 5, 10
021611-000 8
021612-000 . . . . . 6, 12
021613-000 12
021614-000 13
021615-000 5
021616-000 9
021617-000 6
021618-000 6
021619-000 4
021620-000 2
021621-000 . . . . . 6, 11
021622-000 2
021623-000 2

021624-000 2
021625-000 13
021626-000 13
021627-000 8
021628-000 4
021629-000 13
021630-000 8
021631-000 4
021632-000 5
021633-000 4
021634-000 11
021635-000 12
021636-000 12
021637-000 12
021638-000 12
021639-000 12
021640-000 4
021641-000 12
021642-000 2
021643-000 4
021644-000 8
021645-000 8
021741-000 1
021799-000 13
022771-000 4
031625-000 5
037323-000 . . . . . 1, 2, 6, 7, 8, 11, 13
039197-000 12
050537-000 2
068222-000 . . . . . 5, 10
PR110008 11
PR120059 8
PR140009 12
PR140010 12