# VCWB301

CONTROL PANEL . . . . . 1
INTERIOR COMPONENTS . . . . . 2
INTERIOR RACKS . . . . . 3
UNIT TOP . . . . . 4
UNIT BOTTOM . . . . . 5
DOOR . . . . . 6
DECOR . . . . . 7
Appendix A:Pages Index . . . . . A
Appendix B:Parts Index . . . . . B

CONTROL PANEL

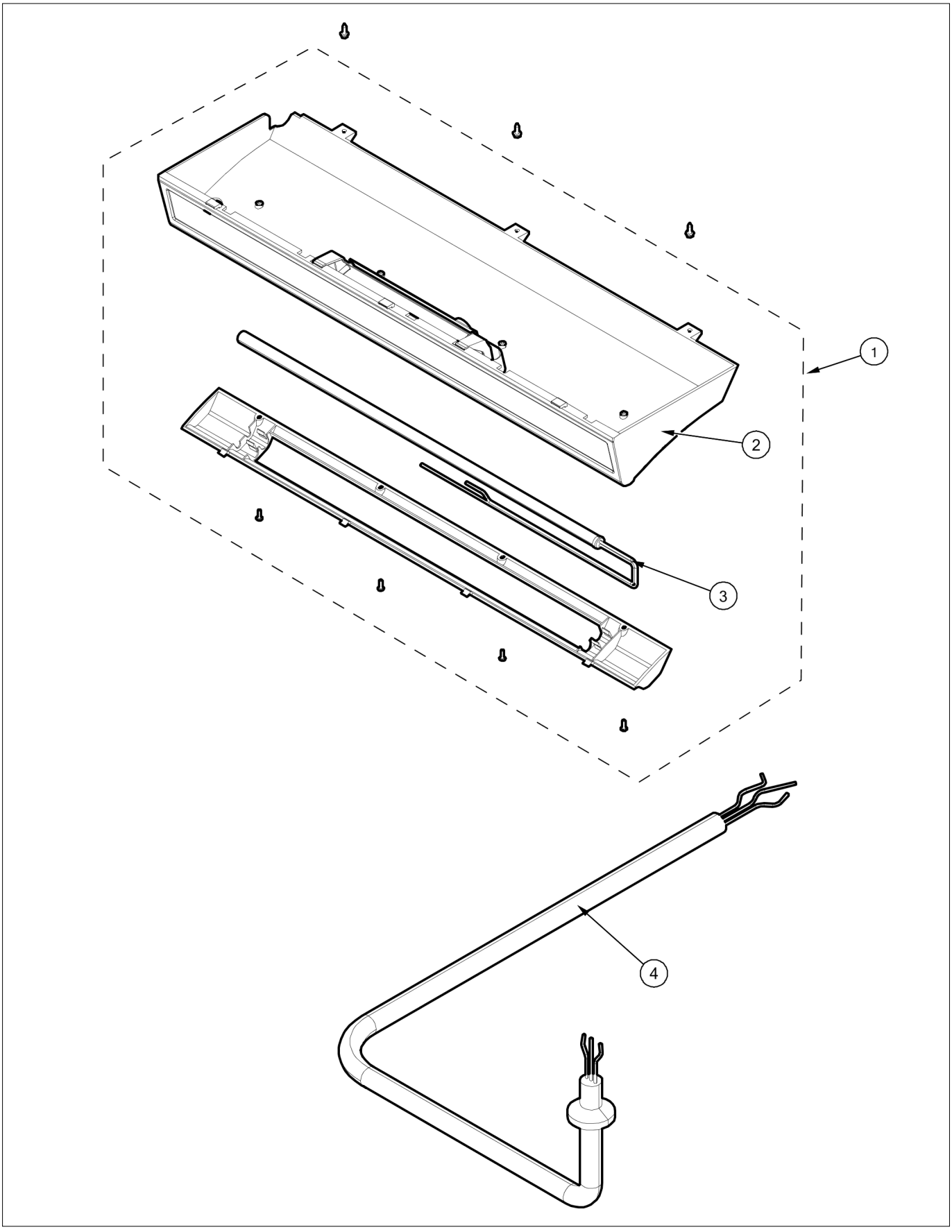

| Item | Part No. | Name | Qty | Uom | NOTES |
|---|---|---|---|---|---|
| 1 | G5099241 | CONTROL PANEL ASSM, WINE COOLER | 1 | EA | |
| 2 | PE940169 | CONTROL PANEL ASSY | 1 | EA | |
| Comments for Part Num. PE940169<br><br>gboltz@VikingRange.com on Sep 21, 2016<br>SEE TR-0074-SP BULLETIN BEFORE ORDERING | | | | | |
| Not Shown | NOTE | FOR UNITS BUILT AFTER SERIAL 031212R10003440 | | EA | |
| Not Shown | 042034-000 | VSD DISPLAY KIT FOR TR-0074-SP BULLETIN | 1 | EA | |
| Not Shown | NOTE | FOR UNITS BUILT ON OR BEFORE SERIAL 031212R10003440 | | EA | |
| 3 | PE950116 | LIGHT ASSY - AURA | 1 | EA | |
| 4 | PE970333 | WIRE HARNESS ASSY WC | 1 | EA | |

INTERIOR COMPONENTS

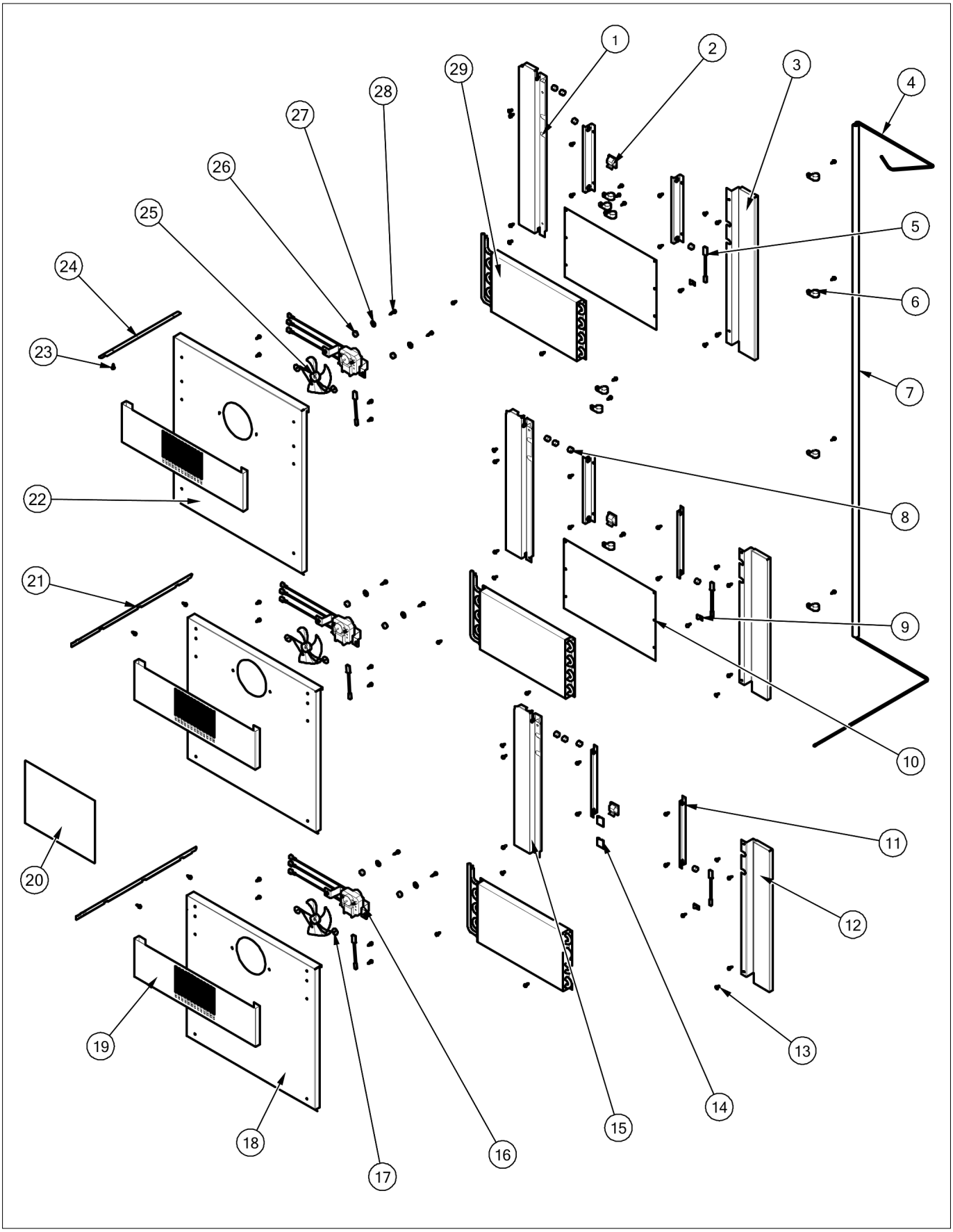

| Item | Part No. | Name | Qty | Uom | NOTES |
|---|---|---|---|---|---|
| 1 | K2099257 | SIDE SPACER - EVAP COVER, TOP LEFT | 1 | EA | |
| 2 | M0104102 | CLIP-CORD | 3 | EA | |
| 3 | K2099256 | SIDE SPACER - EVAP COVER, TOP RT | 1 | EA | |
| 4 | F2098043 | DISCHARGE TUBING | 1 | EA | |
| 5 | PJ930025 | WC - THERMISTER A2253PT22P1 | 6 | EA | |
| 6 | 023823-000 | CLIP, TUBE | 10 | EA | |
| 7 | PB970189 | INSULATION TUBING 45.001 | 1 | EA | |
| 8 | PD040021 | 1/2" BUSHING (VGRC) | 12 | EA | |
| 9 | M0102804 | CLAMP-TUBE VM0102804 | 3 | EA | NO LONGER AVAILABLE |
| 10 | PK930088 | DRAIN SHIELD - EVAP | 2 | EA | |
| 11 | K2098097 | BAFFLE, EVAPORATOR | 6 | EA | |
| 12 | K2098019 | SIDE SPACER EVAP MID/BTM | 2 | EA | |
| 13 | M0210443 | SCREW-E SM VM0210443 | 12 | EA | |
| 14 | M0104106 | CLIP-CORD VM0104106 | 2 | EA | |
| 15 | K2098090 | SIDE SPACER - EVAP COVER MID LT | 2 | EA | |
| 16 | 063491-000 | FAN, EVAP, ASSY | 3 | EA | |
| Not Shown | NOTE | (INCLUDES BLADE) | | EA | |
| 17 | M0270546 | WASHER | 6 | EA | |
| 18 | K2097593 | EVAPORATOR COVER, MID/BTM | 2 | EA | |
| 19 | K2097591 | EVAP FAN COVER | 3 | EA | |
| 20 | PE970427 | CABINET WIRE HARNESS WC | 1 | EA | |
| 21 | PK930124 | WIRE, CHANNEL | 2 | EA | |
| 22 | K2097596 | EVAP COVER - TOP | 1 | EA | |
| 23 | PD020194 | SCR, HEX SRTD WSHR HD, #8-18 X 1/2 | 61 | EA | |
| 24 | PK930089 | EXTRUSION - WIRE CHANNEL | 1 | EA | |
| 25 | N/A | FAN-EVAP/4.330 | 3 | EA | |
| Not Shown | NOTE | (ORDER ITEM 16) | | EA | |
| 26 | 12234001 | GROMMET-VIBRATION | 6 | EA | |

| Item | Part No. | Name | Qty | Uom | NOTES |
|---|---|---|---|---|---|
| 27 | M0270528 | WASHER | 6 | EA | Not available online / Call for pricing and availability |
| 28 | M0238859 | SCREW-SHLDR | 6 | EA | |
| 29 | 074264-000 | EVAPORATOR ASSY, WINE CELLAR, 5 SERIES E-COAT | 3 | EA | |

Comments for Part Num. 074264-000

karen@knservice.com on Sep 1, 2020
these keep me busy. watch out for contamination when changing. use nitrogen, and take your time.

# INTERIOR RACKS

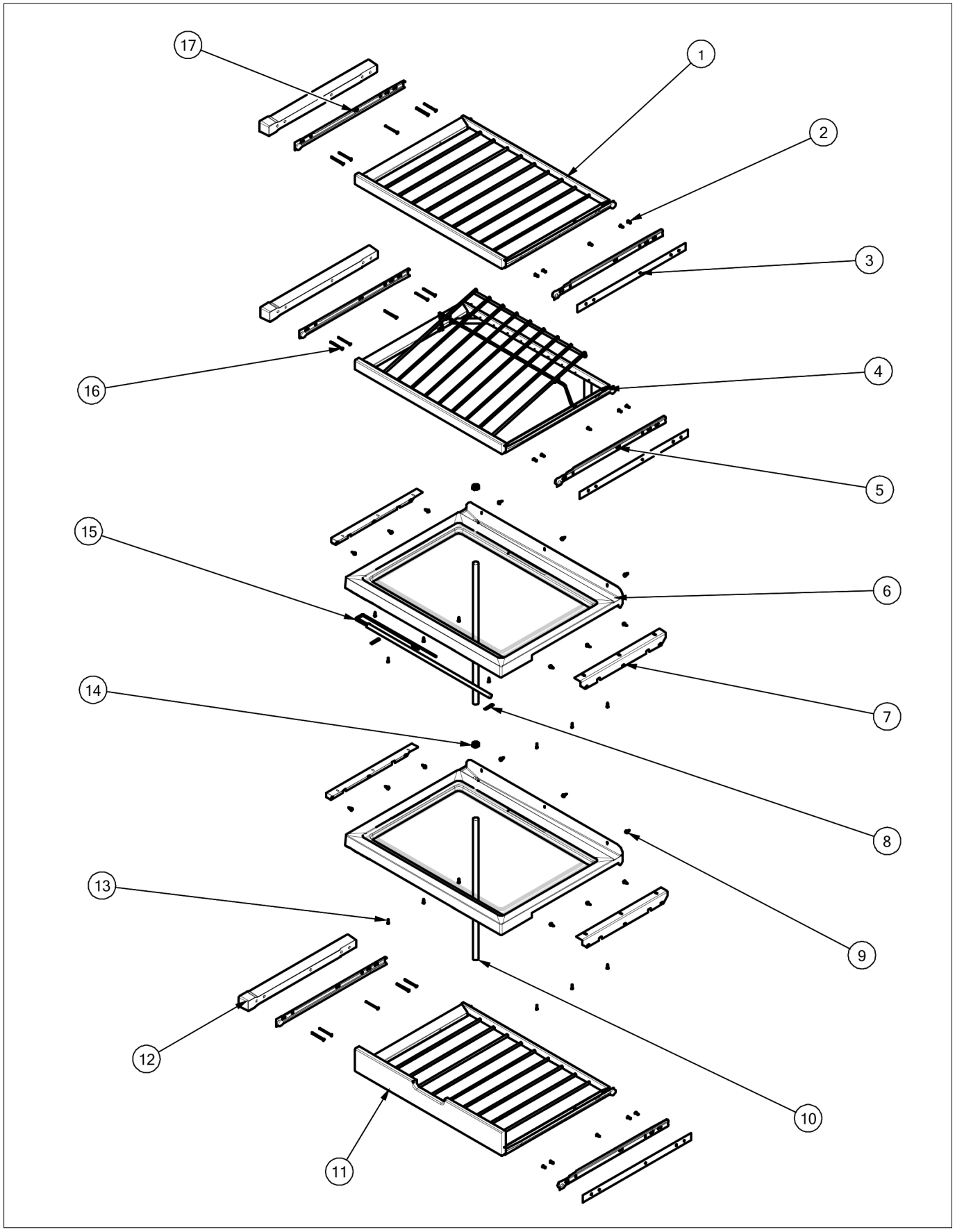

| Item | Part No. | Name | Qty | Uom | NOTES |
|---|---|---|---|---|---|
| 1 | G3298395 | WINE RACK ASM TOP / MID | 8 | EA | |
| 2 | PD920140 | SCREW | 75 | EA | |
| 3 | 004245-000 | SPACER, RACK, WINE | 15 | EA | |
| 4 | G5098397 | WINE RACK ASSY COMP - ADJ | 2 | EA | |
| 5 | PK900030 | WINE RACK SLIDE - CABINET R | 15 | EA | |
| 6 | PE940181 | MULLION SHELF | 2 | EA | |
| 7 | C90998304BK | BRACE-MULLION | 4 | EA | Not available online / Call for pricing and availability |
| 8 | B1098316 | WC LAMP CLIP | 2 | EA | |
| 9 | PD020194 | SCR, HEX SRTD WSHR HD, #8-18 X 1/2 | 18 | EA | |
| 10 | PB920161 | DRAIN TUBE | 2 | EA | |
| 11 | G3298396 | WINE RACK ASM BOT | 5 | EA | |
| 12 | PD940103 | SPACER - WINE RACK | 15 | EA | |
| 13 | PD920147 | 6 X 1/2 HHW S/M/S HI - LO | 14 | EA | |
| 14 | PD930105 | EAR CLAMP | 2 | EA | Not available online / Call for pricing and availability |
| 15 | PE950116 | LIGHT ASSY - AURA | 1 | EA | |
| 16 | PD920155 | FLATHEAD POINT TYPE "AB" #8-18 X 2" | 75 | EA | |
| 17 | PK900029 | WINE RACK SLIDE - CABINET L | 15 | EA | |

UNIT TOP

Image does not exist

| Item | Part No. | Name | Qty | Uom | NOTES |
|---|---|---|---|---|---|
| 1 | PB920158 | HEAT EXCHANGE TUBING - TOP WC | 3 | EA | |
| 2 | PB970187 | INSULATION TUBING 57.500 | 3 | EA | |
| 3 | PE950149 | SWITCH POWER | 1 | EA | |
| 4 | PE950124 | SWITCH - ROCKER | 1 | EA | |
| 5 | M0221523 | SCREW - SHLDR | 4 | EA | |
| 6 | PD020010 | 10 X 3/8 GREEN GROUNDING SCREW | 2 | EA | |
| 7 | PA050127 | T-MANIFOLD | 1 | EA | |
| 8 | PJ970001 | FLUID CONTROL VALVE (HV287544001 SPECIAL-104LN020ACLG) | 3 | EA | |
| 9 | A3189370 | GASKET-FOAM VA3189370 | 2 | EA | |
| 10 | 023823-000 | CLIP, TUBE | 3 | EA | |
| 11 | K2097560 | MOUNTING BRACKET FLUID CONTROL | 1 | EA | |
| 12 | K20912569 | BRACKET GRILLE SUPPORT | 2 | EA | |
| 13 | 059105-000 | CORD-POWER V10916507 | 1 | EA | |
| 14 | PB920159 | DRYER | 1 | EA | |
| 15 | PE970388 | WINE CELLAR CONTROL (RC120A4294) | 1 | EA | |
| 16 | G50915706 | COMPRESSOR AND ELECTRICALS WC | 1 | EA | |
| 17 | 10835901 | GROMMET RUBBER V10835901 | 4 | EA | |
| 18 | A4554818 | BUSHING-SNAP VA4554818 | 1 | EA | |
| 19 | G5096494 | COND. FAN ASSY | 1 | EA | |
| 20 | 068353-000 | CONDENSER ASM | 1 | EA | |
| 21 | PC920131 | HINGE PLATE - LH UPPER | 1 | EA | |
| Not Shown | PC920130 | TOP HINGE ASSY (RH) | 1 | EA | |
| 22 | 000570-000 | FASTENER, BOLT, 1/4-20 IHXWS 1" S ZN SER | 4 | EA | |
| 23 | M0322202 | TIE-WIRE | 1 | EA | |
| 24 | F2096507 | TUBE-PROCESS GRN | 1 | EA | |
| 25 | K2098054 | COVER - CONDENSOR COIL | 1 | EA | |
| 26 | PB070344 | FOAM INSULATION-LEFT CONDENSER | 1 | EA | |

| Item | Part No. | Name | Qty | Uom | NOTES |
|---|---|---|---|---|---|
| 27 | PD020194 | SCR, HEX SRTD WSHR HD, #8-18 X 1/2 | 21 | EA | |
| 28 | PB070345 | FOAM INSULATION-TOP CONDENSER | 1 | EA | |
| NI | M0275196 | TAPE-ELEC SL1 | 1 | EA | |
| NI | A3189368 | GASKET-FOAM VA3189368 | 1 | EA | |
| 29 | PM010618 | RELAY COMPR WC | 1 | EA | |
| 30 | PM010617 | OVERLOAD 5TM COMPR | 1 | EA | |
| NI | PM910522 | CAPACITOR START COMPR WC | 1 | EA | |

UNIT BOTTOM

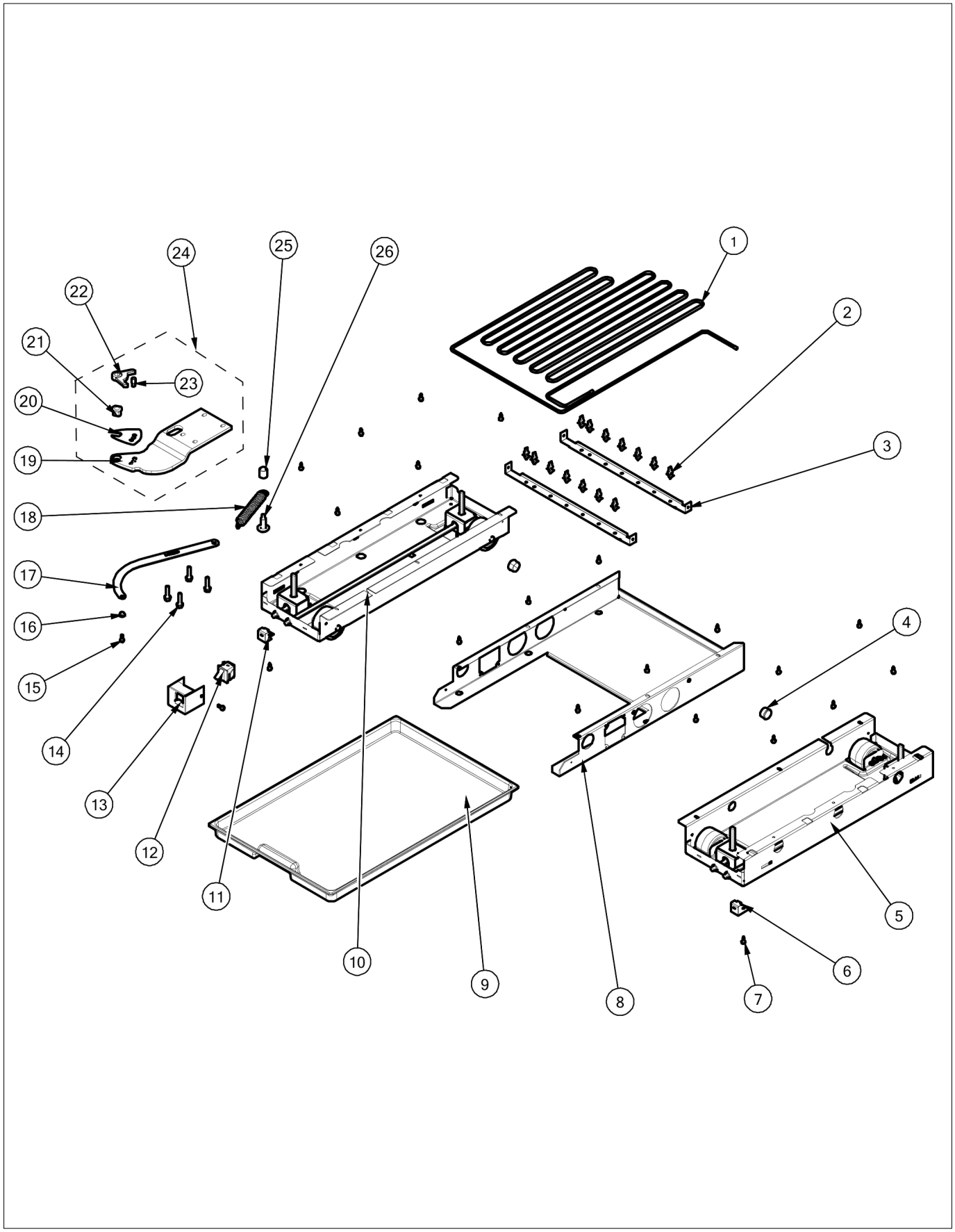

| Item | Part No. | Name | Qty | Uom | NOTES |
|---|---|---|---|---|---|
| 1 | F2098327 | WC - SERPENTINE - DRAIN | 1 | EA | |
| 2 | PD030146 | STAND OFF LOCK CLIP | 14 | EA | |
| 3 | K20911831 | BRACKET CONDENSATE SUPPORT | 2 | EA | |
| 4 | A4554806 | BUSHING-SNAP VA4554806 | 2 | EA | |
| 5 | 060890-000 | LEVELER MODULE R | 1 | EA | |
| 6 | K2098044 | BRKT GRILLE SUPPORT | 1 | EA | |
| 7 | PD020194 | SCR, HEX SRTD WSHR HD, #8-18 X 1/2 | 20 | EA | |
| 8 | K20915952 | SHIELD BOTTOM DRAIN | 1 | EA | |
| 9 | PK930348 | PAN DRAIN | 1 | EA | |
| 10 | 060891-000 | LEVELER MODULE L | 1 | EA | |
| 11 | K2098096 | BRACKET GRILLE SUPPORT | 1 | EA | |
| 12 | PE950142 | SWITCH EMB MODEL 602 | 1 | EA | |
| 13 | 002668-000 | SWITCH,GRILLE,MT,LH | 1 | EA | |
| 14 | 000570-000 | FASTENER, BOLT, 1/4-20 IHXWS 1" S ZN SER | 4 | EA | |
| 15 | M0220417 | SCREW-TC | 2 | EA | |
| 16 | PD940094 | BUSHING | 1 | EA | |
| 17 | PC920149 | BAR-WC BOT HINGE LH | 1 | EA | |
| 17 | PC920166 | BAR-WC BOT HINGE RH | 1 | EA | |
| 18 | PC910015 | SPRING EXTENSION | 1 | EA | |
| 19 | PC920143 | HINGE PLATE - WC BOT LH | 1 | EA | |
| 19 | PC920142 | HINGE PLATE - WC BOT RH | 1 | EA | |
| 20 | PC920144 | PLATE - WC DOOR SHIM | 1 | EA | |
| 21 | PD940090 | BUSHING - WC DOOR LEVEL | 1 | EA | |
| 22 | PD940091 | BUSHING - DOOR STOP | 1 | EA | |
| 23 | PC920145 | PIN - DOOR STOP | 1 | EA | |
| 24 | G3297584 | HINGE ASSY - LH | 1 | EA | |
| 24 | G3297583 | HINGE ASSY - RH | 1 | EA | |
| 25 | PD940107 | ROUND SPRING SPACER | 1 | EA | |
| 26 | M0221523 | SCREW - SHLDR | 1 | EA | |
| NI | A3189368 | GASKET-FOAM VA3189368 | 1 | EA | |

DOOR

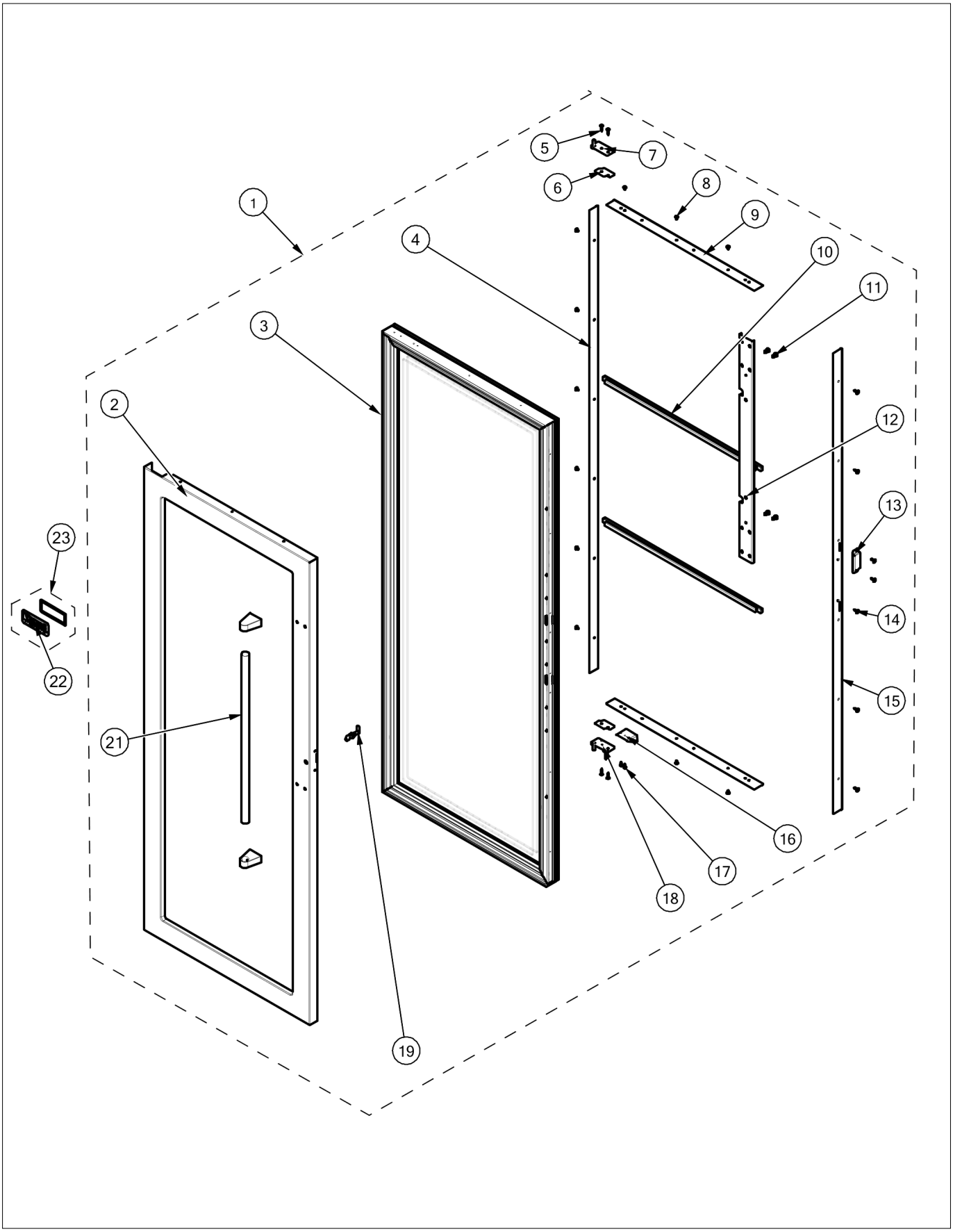

| Item | Part No. | Name | Qty | Uom | NOTES |
|---|---|---|---|---|---|
| 1 | 035677-000 | DOOR,ASM,WC PRO LH CLR | 1 | EA | |
| 1 | 035678-000 | DOOR,ASM,WC PRO RH CLR | 1 | EA | Not available online / Call for pricing and availability |
| 2 | 035150-000 | DOOR SKIN, PRO, WC, LH | 1 | EA | |
| 2 | 035128-000 | DOOR SKIN, PRO, WC, RH | 1 | EA | |
| 3 | PM010595 | DOOR GLASS ASM DES/PRO CLR | 1 | EA | |
| 4 | PK930103 | SPACER - WC PRO/DES HINGE | 1 | EA | |
| 5 | PD920174 | 10X7/8 PHILLIPS SMA TRI LOBE SA | 4 | EA | |
| 6 | PD940092 | SPACER - DOOR HINGE | 2 | EA | |
| 7 | PC920132 | PIVOT PLATE ASSY - LH | 1 | EA | |
| 7 | PC920133 | PIVOT PLATE ASSY - RH | 1 | EA | |
| 8 | PD020032 | SRW-8(A)X3/8"PH.WFR HD 7/16DIA*NICL | 11 | EA | |
| 9 | PK930099 | SPACER - DOOR WC PRO | 2 | EA | |
| 10 | PB970148 | GASKET - WC DOOR SEAL | 2 | EA | |
| 11 | 035647-000 | BOLT, FASTENER, HXH, SST | 4 | EA | |
| 12 | K2098342 | BRACKET - HANDLE SUPPORT | 1 | EA | |
| 13 | B2098666 | COVER STRIKE | 1 | EA | |
| 14 | M0210458 | SCR 8-18 X 5/8 WAFER PH SMS | 7 | EA | |
| 15 | PK930155 | SPACER - WC PRO / DES HANDLE | 1 | EA | |
| 16 | PD050019 | STRIKER DOOR SWITCH | 1 | EA | |
| 17 | PD020194 | SCR, HEX SRTD WSHR HD, #8-18 X 1/2 | 2 | EA | |
| 18 | PC920147 | PIVOT PLATE ASSY - WC LH BOT | 1 | EA | |
| 18 | PC920146 | PIVOT PLATE ASSY - WC RH BOT | 1 | EA | |
| 19 | 001401-000 | LOCKING, ARM ASM DES | 1 | EA | |
| NI | PM910318 | WC DOOR LOCK KEY | 1 | EA | |
| 20 | 000268-000 | HANDLE ENDCAP | 2 | EA | |
| 21 | PE930101 | VCSB482 HANDLE -(12466403) | 1 | EA | |
| 22 | PE010016 | LOGO (ALL RANGES) *BK/CHR 307997W | 1 | EA | |

| Item | Part No. | Name | Qty | Uom | NOTES |
|---|---|---|---|---|---|
| 23 | PE010079 | 4.5" LOGO/VIKING PROF *BK/BR | 1 | EA | |
| 23 | G5099007 | DOOR NAMEPLATE VIKING WC | 1 | EA | |
| NI | 005504-000 | GASKET,WC, FC | 1 | EA | Not available online / Call for pricing and availability |

DECOR

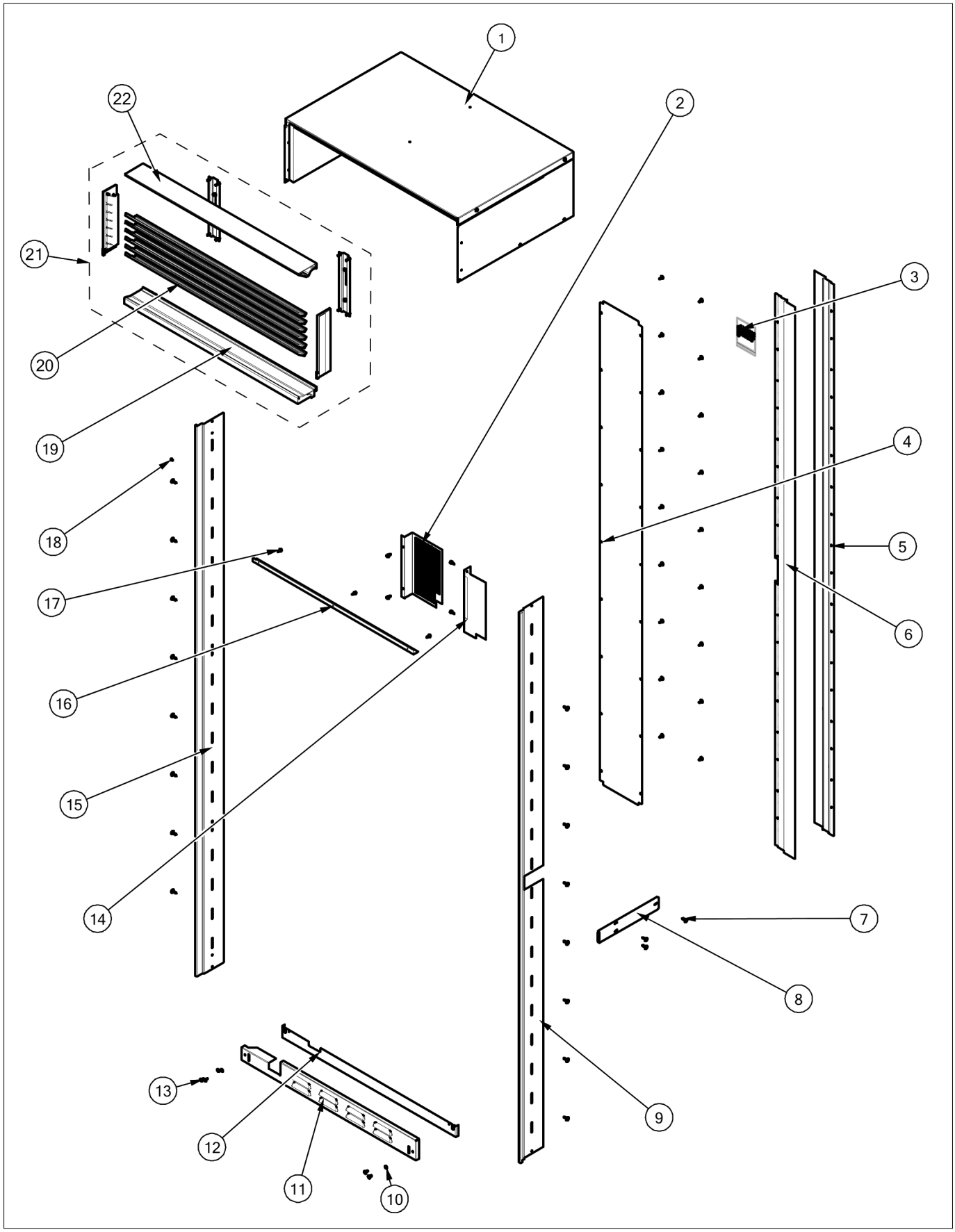

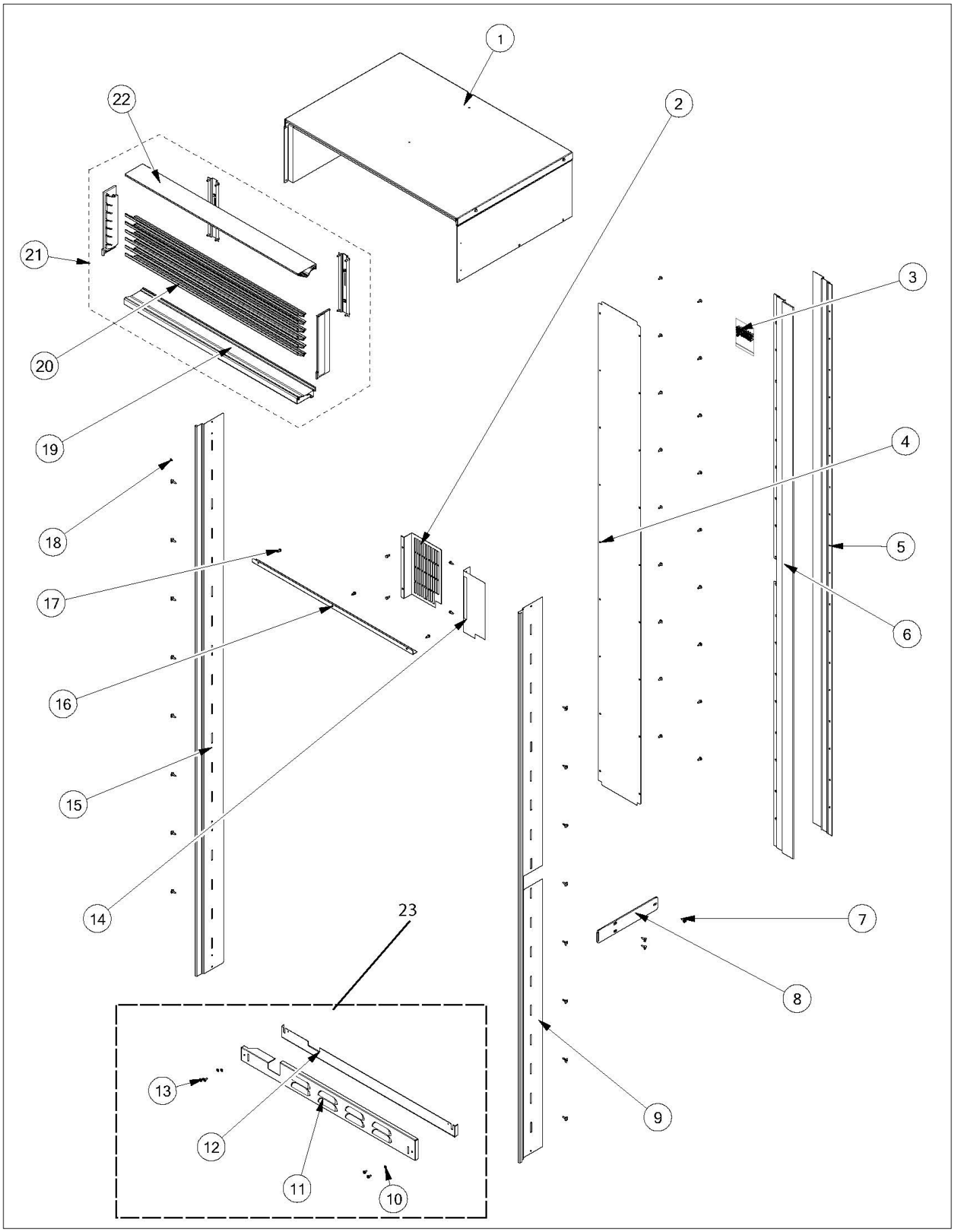
1
2
3
4
5
6
7
8
9
10
11
12
13
14
15
16
17
18
19
20
21
22
23

| Item | Part No. | Name | Qty | Uom | NOTES |
|---|---|---|---|---|---|
| 1 | 007982-000 | MC COVER ASM WC | 1 | EA | Not available online / Call for pricing and availability |
| 2 | 003586-000 | GUARD MC WC | 1 | EA | |
| 3 | M0215318 | SCREW-SM | 22 | EA | |
| 4 | K2097557 | REAR AIR DUCT COVER | 1 | EA | |
| 5 | PK920066 | TRIM, EXTRU, SIDE DES | 1 | EA | |
| 6 | 006420-000 | TRIM, EXTRU,SIDE, WC DES | 1 | EA | |
| 7 | M0210458 | SCR 8-18 X 5/8 WAFER PH SMS | 19 | EA | |
| 8 | PC920189 | STRIKE PLATE | 1 | EA | |
| 9 | B2098350 | SIDE TRIM - WC PRO LH | 1 | EA | |
| 10 | 40370P01 | NYLON FLAT WASHER V40370P01 | 4 | EA | |
| 11 | C9098047BK | BASE GRILLE - WC TOP LH BK | 1 | EA | |
| 11 | C9098041BK | BASE GRILLE - WC TOP RH | 1 | EA | |
| 12 | C9098048BK | BASE GRILLE - WC BOT LH BK | 1 | EA | |
| 12 | C9098042BK | BASE GRILLE - WC BOT RH | | EA | |
| 13 | M0210443 | SCREW-E SM VM0210443 | 22 | EA | |
| 14 | 003589-000 | GUARD MC WC RIGHT | 1 | EA | |
| 15 | PK910123 | SIDE TRIM - PRO | 1 | EA | |
| 16 | PE940199 | FILLER, L - BRACKET | 1 | EA | |
| 17 | PD020194 | SCR, HEX SRTD WSHR HD, #8-18 X 1/2 | 7 | EA | |
| 18 | PC040010 | POP RIVET (.063/GR -.125) GAMD42-A | 1 | EA | |
| 19 | PM910181 | GRILLE - LOWER LH | 1 | EA | |
| 20 | PM910180 | GRILLE - MIDDLE WC | 6 | EA | |
| 21 | G3297518 | GRILLE ASSY - 30 DES WC LH | 1 | EA | |
| 22 | PM910179 | GRILLE - UPPER | 1 | EA | |
| 23 | G3298040 | BASE GRILLE - WC LH | 1 | EA | |
| 23 | G3298049 | BASE GRILLE - WC RH | 1 | EA | |
| NI | M0223509 | SCREW-LAG | 8 | EA | |
| NI | M0270510 | WASHER | 8 | EA | |
| NI | B2097509 | GRILLE - TOP TRIM | 1 | EA | |

Appendix A:Pages Index

CONTROL PANEL . . . . . 1
DECOR . . . . . 7
DOOR . . . . . 6
INTERIOR COMPONENTS . . . . . 2
INTERIOR RACKS . . . . . 3
UNIT BOTTOM . . . . . 5
UNIT TOP . . . . . 4

Appendix B:Parts Index


000268-000 . . . . . 6
000570-000 . . . . . 4, 5
001401-000 . . . . . 6
002668-000 . . . . . 5
003586-000 . . . . . 7
003589-000 . . . . . 7
004245-000 . . . . . 3
005504-000 . . . . . 6
006420-000 . . . . . 7
007982-000 . . . . . 7
023823-000 . . . . . 2, 4
035128-000 . . . . . 6
035150-000 . . . . . 6
035647-000 . . . . . 6
035677-000 . . . . . 6
035678-000 . . . . . 6
042034-000 . . . . . 1
059105-000 . . . . . 4
060890-000 . . . . . 5
060891-000 . . . . . 5
063491-000 . . . . . 2
068353-000 . . . . . 4
074264-000 . . . . . 2
10835901 . . . . . 4
12234001 . . . . . 2
40370P01 . . . . . 7
A3189368 . . . . . 4, 5
A3189370 . . . . . 4
A4554806 . . . . . 5
A4554818 . . . . . 4
B1098316 . . . . . 3
B2097509 . . . . . 7
B2098350 . . . . . 7
B2098666 . . . . . 6
C9098041BK . . . . . 7
C9098042BK . . . . . 7
C9098047BK . . . . . 7
C9098048BK . . . . . 7
C90998304BK . . . . . 3
F2096507 . . . . . 4
F2098043 . . . . . 2
F2098327 . . . . . 5
G3297518 . . . . . 7
G3297583 . . . . . 5
G3297584 . . . . . 5
G3298040 . . . . . 7
G3298049 . . . . . 7
G3298395 . . . . . 3
G3298396 . . . . . 3
G50915706 . . . . . 4
G5096494 . . . . . 4
G5098397 . . . . . 3
G5099007 . . . . . 6
G5099241 . . . . . 1
K20911831 . . . . . 5
K20912569 . . . . . 4
K20915952 . . . . . 5
K2097557 . . . . . 7
K2097560 . . . . . 4
K2097591 . . . . . 2
K2097593 . . . . . 2
K2097596 . . . . . 2
K2098019 . . . . . 2
K2098044 . . . . . 5
K2098054 . . . . . 4
K2098090 . . . . . 2
K2098096 . . . . . 5
K2098097 . . . . . 2
K2098342 . . . . . 6
K2099256 . . . . . 2
K2099257 . . . . . 2
M0102804 . . . . . 2
M0104102 . . . . . 2
M0104106 . . . . . 2
M0210443 . . . . . 2, 7
M0210458 . . . . . 6, 7
M0215318 . . . . . 7
M0220417 . . . . . 5
M0221523 . . . . . 4, 5
M0223509 . . . . . 7
M0238859 . . . . . 2

M0270510 . . . . . 7
M0270528 . . . . . 2
M0270546 . . . . . 2
M0275196 . . . . . 4
M0322202 . . . . . 4
PA050127 . . . . . 4
PB070344 . . . . . 4
PB070345 . . . . . 4
PB920158 . . . . . 4
PB920159 . . . . . 4
PB920161 . . . . . 3
PB970148 . . . . . 6
PB970187 . . . . . 4
PB970189 . . . . . 2
PC040010 . . . . . 7
PC910015 . . . . . 5
PC920130 . . . . . 4
PC920131 . . . . . 4
PC920132 . . . . . 6
PC920133 . . . . . 6
PC920142 . . . . . 5
PC920143 . . . . . 5
PC920144 . . . . . 5
PC920145 . . . . . 5
PC920146 . . . . . 6
PC920147 . . . . . 6
PC920149 . . . . . 5
PC920166 . . . . . 5
PC920189 . . . . . 7
PD020010 . . . . . 4
PD020032 . . . . . 6
PD020194 . . . . . 2, 3, 4, 5, 6, 7
PD030146 . . . . . 5
PD040021 . . . . . 2
PD050019 . . . . . 6
PD920140 . . . . . 3
PD920147 . . . . . 3
PD920155 . . . . . 3
PD920174 . . . . . 6
PD930105 . . . . . 3
PD940090 . . . . . 5
PD940091 . . . . . 5
PD940092 . . . . . 6
PD940094 . . . . . 5
PD940103 . . . . . 3
PD940107 . . . . . 5
PE010016 . . . . . 6
PE010079 . . . . . 6
PE930101 . . . . . 6
PE940169 . . . . . 1
PE940181 . . . . . 3
PE940199 . . . . . 7
PE950116 . . . . . 1, 3
PE950124 . . . . . 4
PE950142 . . . . . 5
PE950149 . . . . . 4
PE970333 . . . . . 1
PE970388 . . . . . 4
PE970427 . . . . . 2
PJ930025 . . . . . 2
PJ970001 . . . . . 4
PK900029 . . . . . 3
PK900030 . . . . . 3
PK910123 . . . . . 7
PK920066 . . . . . 7
PK930088 . . . . . 2
PK930089 . . . . . 2
PK930099 . . . . . 6
PK930103 . . . . . 6
PK930124 . . . . . 2
PK930155 . . . . . 6
PK930348 . . . . . 5
PM010595 . . . . . 6
PM010617 . . . . . 4
PM010618 . . . . . 4
PM910179 . . . . . 7
PM910180 . . . . . 7
PM910181 . . . . . 7
PM910318 . . . . . 6
PM910522 . . . . . 4