VDR5366BSS01

Control View 1
Surface Cooking View 2
Base View 3
Gas Asm View 4
Top Electrical View 5
Decor View 6
Door View 7
Cavity Electrical View 8
Wiring View 1 9
Wiring View 2 10
Wiring View 3 11
Wiring View 4 12
Appendix A:Pages Index . . . . . A
Appendix B:Parts Index . . . . . B

Control View

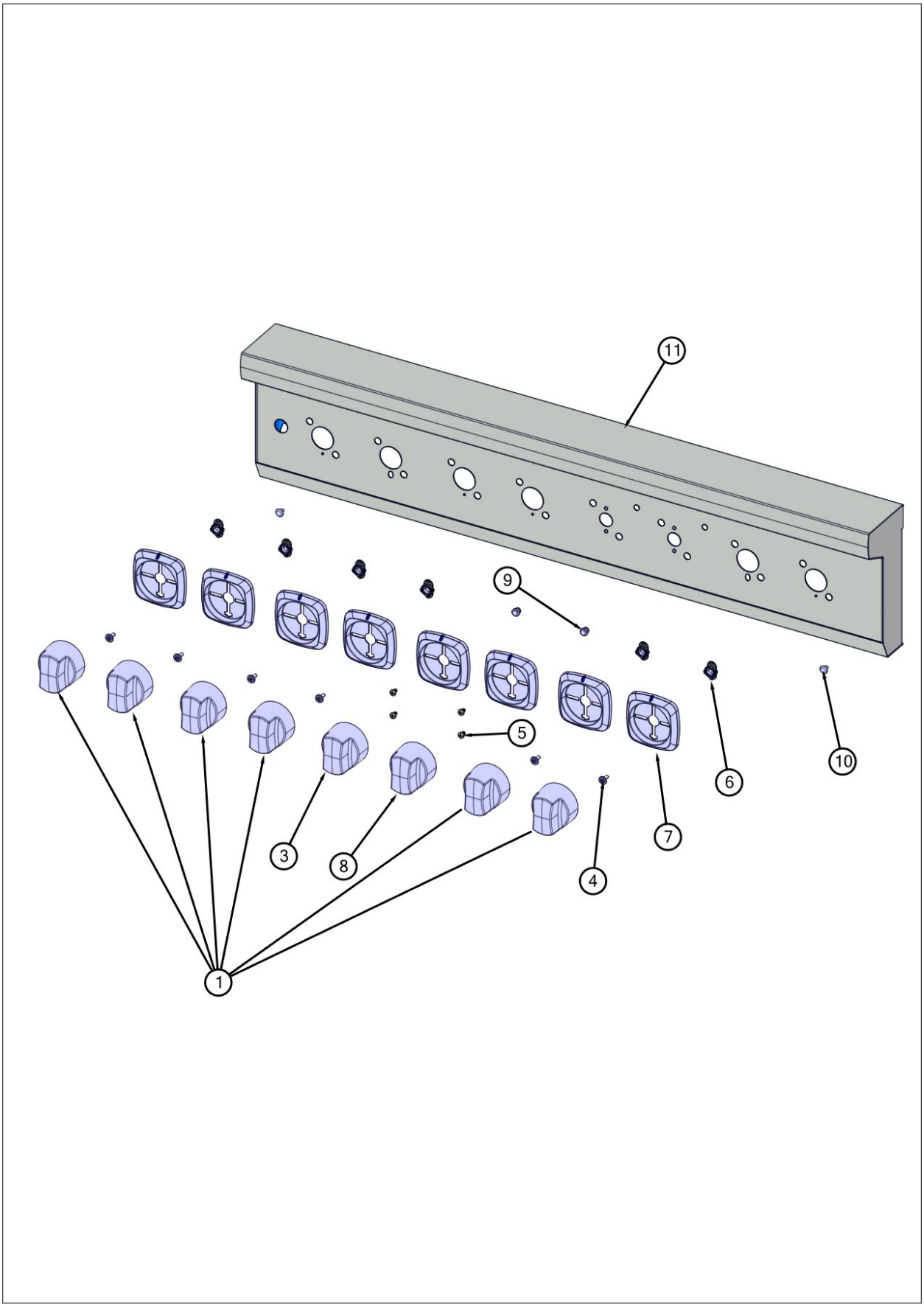

Item	Part No.	Name	Qty	Uom	NOTES
1	063759-2809	KNOB, BNR, TOP, PRO ASSY	6	EA	
3	061038-000	KNOB, OVN, SEL, PRO, VDSC/VESC, ASSY (SEE 044587-000)	1	EA	
4	PD020046	' #8 X 1/2 SCREWS	6	EA	
5	PD020269	#8 PAN HEAD SCREW	4	EA	
6	044512-000	BEARING, BEZEL, ASM	6	EA	
Not Shown	NOTE	(BEFORE 02/14/18)		EA	
7	048326-000	BZL, KNOB	8	EA	
Not Shown	NOTE	(BEFORE 02/14/18)		EA	
7	063891-000	BZL, KNOB	8	EA	
Not Shown	NOTE	(ON OR AFTER 02/14/18)		EA	
8	061029-000	KNOB, TSTAT, OVEN, D/F, ASSY (SEE 044587-000)	1	EA	
9	027968-000	INDICATOR, LIGHT, BLUE	2	EA	
10	PD020032	SRW-8(A)X3/8"PH.WFR HD 7/16DIA*NICL	2	EA	
11	062953-2800	PANEL, CTRL, WELD ASM, VDR5366B W/GRAPHICS	1	EA	

Surface Cooking View

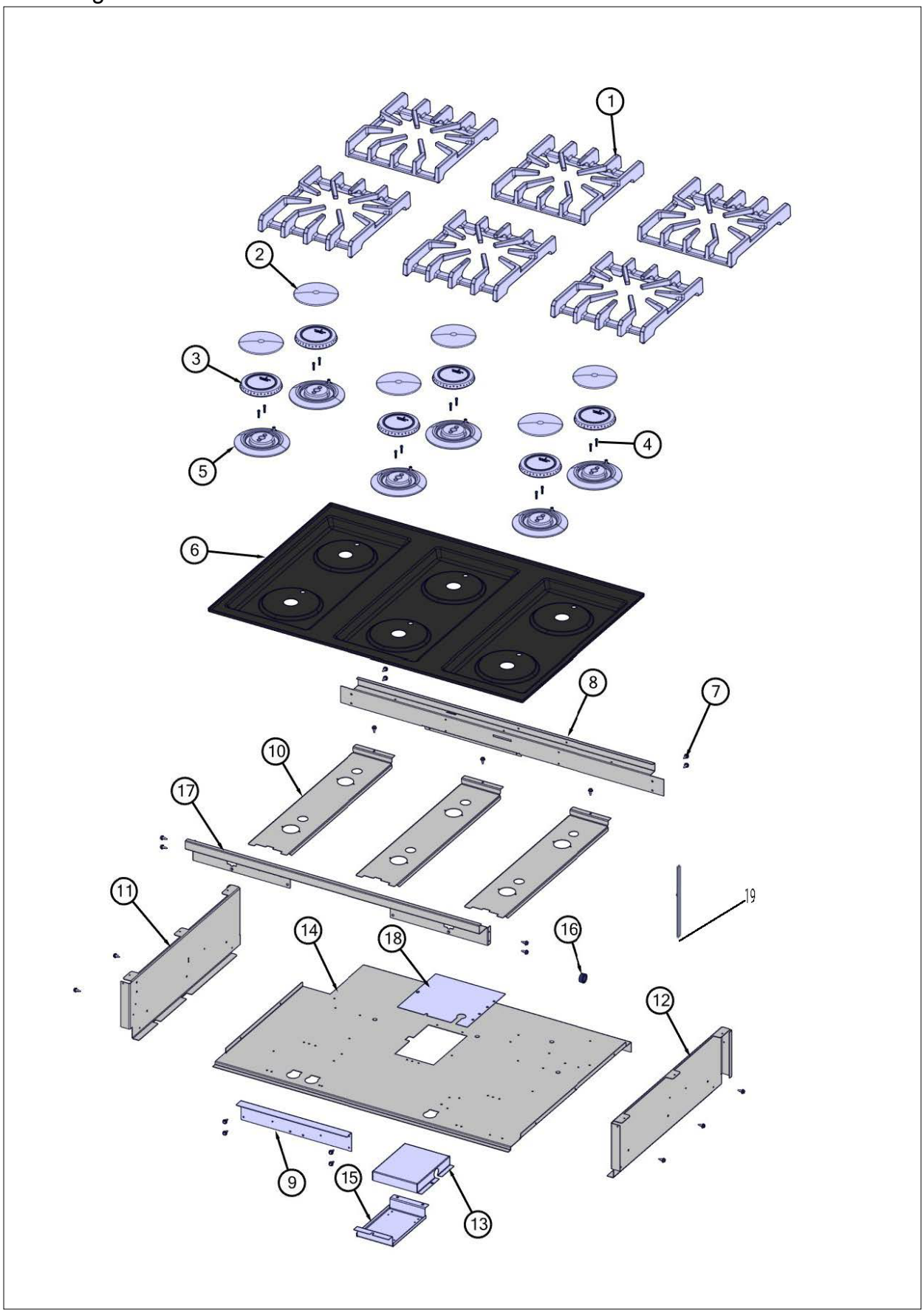

Item	Part No.	Name	Qty	Uom	NOTES
1	049420-000	GRATE, BURNER, ASM	6	EA	
NI	049416-000	BUMPER, GRATE	24	EA	
2	066958-000	D BURNER CAP *MATTE BLACK*	6	EA	
3	018200-000	ADJUSTED SEALED BURNER HEAD	6	EA	
4	009197-000	#6-32 X 5/8 18-8 SS NC SOC CAP	12	EA	
5	066810-042	BURNER, BASE, ASM, BLK	6	EA	
6	E9108439BK	MAIN TOP (VGRT3626B) *BK*	1	EA	
7	003860-000	10-18 x .500 FASTNR,SCR,HXWH,STL,ZPLT	20	EA	
8	004602-000	REAR SUPPORT, BURNER BOX 36"	1	EA	
9	012771-000	RANGETOP, BRKT, FR, VDSC CUSTOM	1	EA	
10	002923-000	BURNER MODULE SUPPORT	3	EA	
11	049578-000	PNL, SIDE, RANGE, LEFT TOP	1	EA	
12	049588-000	PNL, SIDE, RANGE, RIGHT TOP	1	EA	
13	024305-000	COVER, DSI, 6G	1	EA	
14	024659-000	BURNER,BOX,BOT,VDSC536T	1	EA	
15	024301-000	BOARD, DSI, CRADLE	1	EA	
16	PD040005	SNAP BUSHING - 7/8"	2	EA	
17	063551-000	SUPPORT, BNR, BOX, FRONT, 36"	1	EA	
18	024398-000	COVER, ACS, DSI	1	EA	
19	049609-000	GASKET, FOAM	1	EA	

Base View

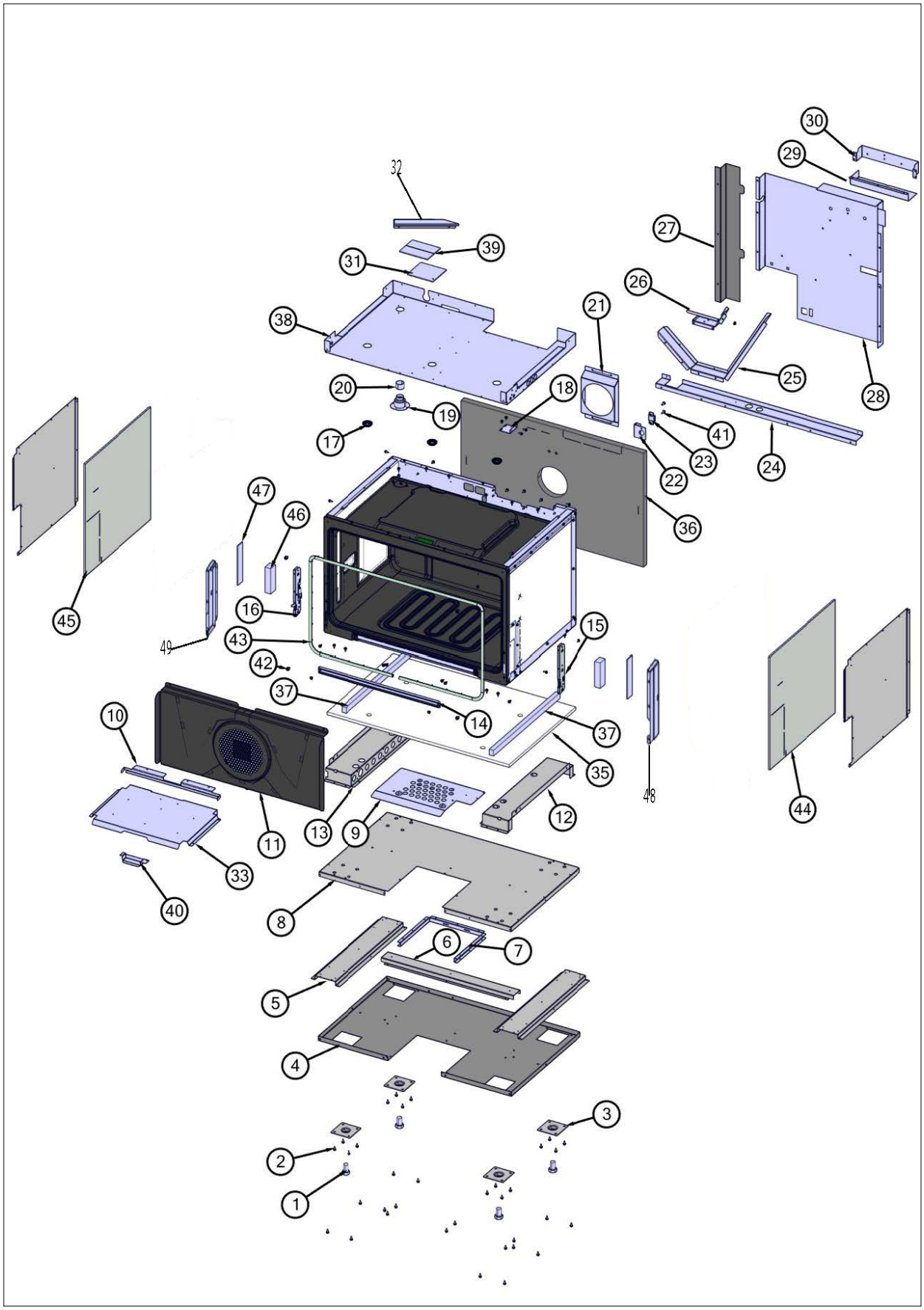
1
2
3
4
5
6
7
8
9
10
11
12
13
14
15
16
17
18
19
20
21
22
23
24
25
26
27
28
29
30
31
32
33
35
36
37
37
38
39
40
41
42
43
44
45
46
47
48
49

Item	Part No.	Name	Qty	Uom	NOTES
1	PD010022	HEX HD. BOLT - 3/4-10 X 1-1/4"	4	EA	
2	003860-000	10-18 x .500 FASTNR,SCR,HXWH,STL,ZPLT	59	EA	
3	PC030007	LEG PLATE - 3/4" THREADED HOLE	4	EA	
4	003326-000	PLATE, BASE, LWR, 36"	1	EA	
5	003053-000	BASE LEG SUPPORT CHANNEL	2	EA	
6	003327-000	BRACE, BASE, 36"	1	EA	
7	003054-000	BASE CENTER CUTOUT STIFFENER	1	EA	
8	003328-000	PLATE, BASE, UPR, 36"	1	EA	
9	024909-000	SHIELD, WRG	1	EA	
10	013621-000	BRACKET, BRL, REAR	1	EA	
Comments for Part Num. 013621-000 gboltz@VikingRange.com on Feb 5, 2016 After 1-22-2015					
11	006177-402	BAFFLE,CNVN,ASM,VDSC 36" BK	1	EA	
12	038268-000	SUPPORT, OVEN, BOT RH	1	EA	
13	003763-000	OVEN MODULE SUPPORT CHANNEL, LH	1	EA	
14	032861-000	COVER, BAKE TRAY, BK PORC	1	EA	
15	045060-000	RECEIVER, HINGE, SLOW-CLOSE, UNDAMPENED	1	EA	
16	054057-000	RECEIVER, HINGE, NUOVA STAR, DAMPENED	1	EA	
17	PB070079	SILICONE EXTRUSION (DGSU)	3	EA	
18	A20012649	DOOR SWITCH BRACKET	1	EA	
19	PM010014	SMOKE ELIMINATOR (VDSC)	1	EA	
20	PB020275	VENT TUBE	1	EA	
21	A2009697	BRACKET, CONVECTION INSULATION	1	EA	
22	A2002195	POWER CORD MOUNTING BRKT (VDSC)	1	EA	
23	A1002457	POWER CORD MOUNTING STRAP (VDSC)	1	EA	

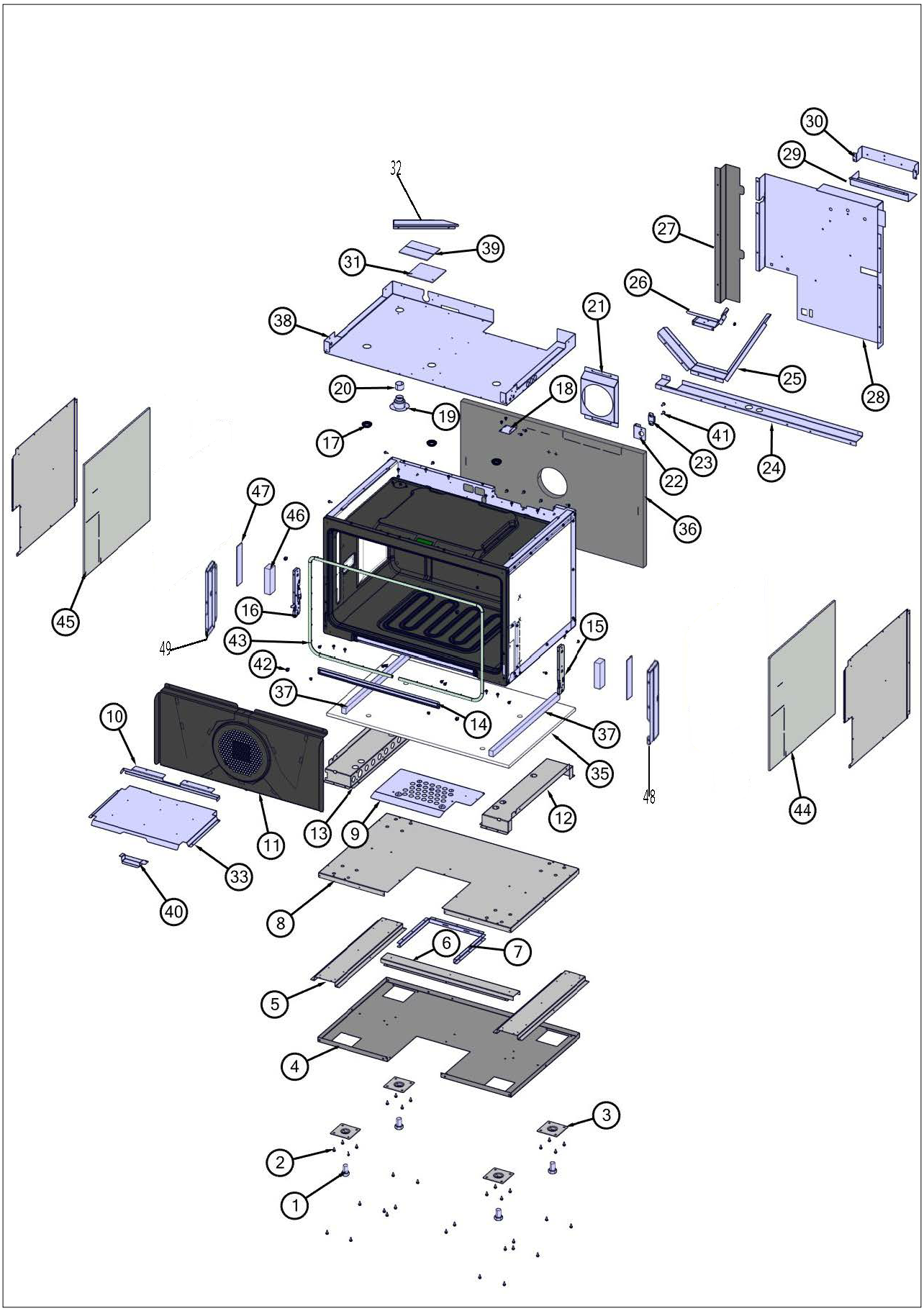
1
2
3
4
5
6
7
8
9
10
11
12
13
14
15
16
17
18
19
20
21
22
23
24
25
26
27
28
29
30
31
32
33
35
36
37
38
39
40
41
42
43
44
45
46
47
48
49

Item	Part No.	Name	Qty	Uom	NOTES
24	004503-000	BASE, LEDG, BACK, 36	1	EA	
25	002941-000	BAFFLE, FAN, REAR	1	EA	
26	003356-000	DIVERTER, AIR	1	EA	
27	003245-000	CHANNEL, WIRE, REAR	1	EA	
28	003272-000	COVER, BACK	1	EA	
29	046261-000	BRACKET, FILLER, BLOWER	1	EA	
30	047829-000	MOUNT, BLO	1	EA	
31	013564-000	LOWER LATCH INSULATION	1	EA	
32	004698-000	FLUE DUCT, VDSC36"	1	EA	
33	A20014021	REFLECTOR, BROIL	1	EA	
35	016838-000	INSULATION, BAKE, BOT	1	EA	
36	016843-000	INSULATION, CAVITY, BACK	1	EA	
37	013547-000	BAKE ELEMENT INSULATION	4	EA	
38	061658-000	RETAINER, INSULATION, UPPER, 36"	1	EA	
39	004285-000	INSULATION, FOIL-BACKED,4"x5"	1	EA	
40	016021-000	COVER, TERM, BROILER	1	EA	
41	PD020014	10X3/4 PH TR HD SMS	2	EA	
42	043800-000	BUMPER, RBR, BLK	4	EA	
43	051594-000	GASKET, LINER, DF, ASM, 36"	1	EA	
44	064108-000	INSULATION, SIDE, BACK, FOIL, RH	2	EA	
45	064111-000	INSULATION, SIDE, BACK, FOIL, LH	2	EA	
46	005255-000	HINGE INSULATION	2	EA	
47	013572-000	HINGE INSULATION	2	EA	
48	048195-000	SHIM, SHIELD, RETAINER, RH HINGE	1	EA	
NI	046651-000	SCREW, TRILOBE, 10-32, TRUSS, PH, BLACK	5	EA	
NI	052632-000	WASHER, FLAT, PTFE, NO. 10	5	EA	
49	048199-000	SHIM, SHIELD, RETAINER, LH HINGE	1	EA	
NI	048461-000	INSULATION KIT #5	1	EA	

Gas Asm View

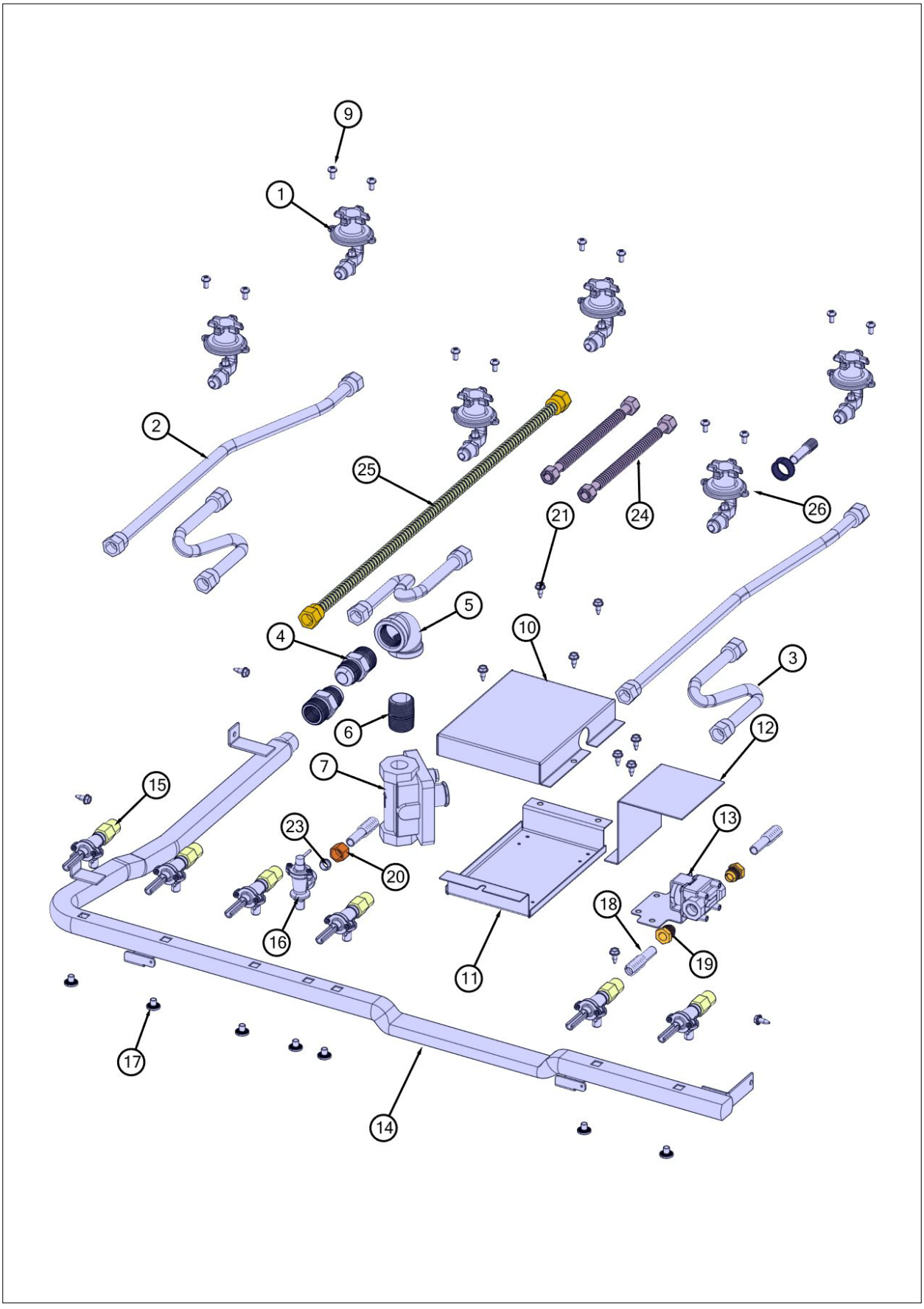

Item	Part No.	Name	Qty	Uom	NOTES
1	066197-042	15000 BTU NAT JETHOLDER	5	EA	
1	001394-046	12.5 K BTU LP JETHOLDER	5	EA	
2	PB020193	16" FLEX TUBING W/CONNECTORS	2	EA	
3	PB020192	10" FLEX TUBING W/CONNECTORS	3	EA	
4	044824-000	FITTING, ADAPTOR, 1/2 FLEX TUBING	2	EA	
5	044325-000	ELBOW, 90 DEG STREET, 3/4" NPT	1	EA	
6	044322-000	NIPPLE, CLOSE, 3/4" NPTM TO 3/4" NPTM	1	EA	
7	PA070003	PRESSURE REGULATOR (NAT.)	1	EA	
7	013386-000	LP PRESSURE REGULATOR	1	EA	
9	PD020004	10X3/8PH.HD.TYPE 25 REPL PD040125	12	EA	
10	024305-000	COVER, DSI, 6G	1	EA	
11	024301-000	BOARD, DSI, CRADLE	1	EA	
12	009402-000	SOLENOID HEAT SHIELD COVER	1	EA	
13	009111-000	VALVE, SOL, SINGLE	1	EA	
14	005480-000	MANIFOLD, GAS, VDSC36" -6B	1	EA	
15	061230-000	VALVE, BRS, ASM, TOP, BURNER, FLRE, FTG, 5/8-18 UNF	6	EA	
16	007147-000	SHUT OFF VALVE	1	EA	
17	PD010012	VALVE BOLT 1/4-20 UNC-2B 5/16" M.S.	7	EA	
18	PB020126	3/8"" S.S. FLEX TUBING 15"" (DGCU)	3	EA	
19	PB040050	3/8CC MALE COMP. FITTING W/FERRULE	2	EA	
20	PB040213	3/8" COMPRESSION NUT (DGCU)	1	EA	
21	003860-000	10-18 x .500 FASTNR,SCR,HXWH,STL,ZPLT	15	EA	
23	PB040192	3/8"" CC FERREL (DGCU)	1	EA	
24	PB020198	20" FLEX TUBING	2	EA	
25	007726-000	21" FLEX TUBING W/CONNECTORS	1	EA	

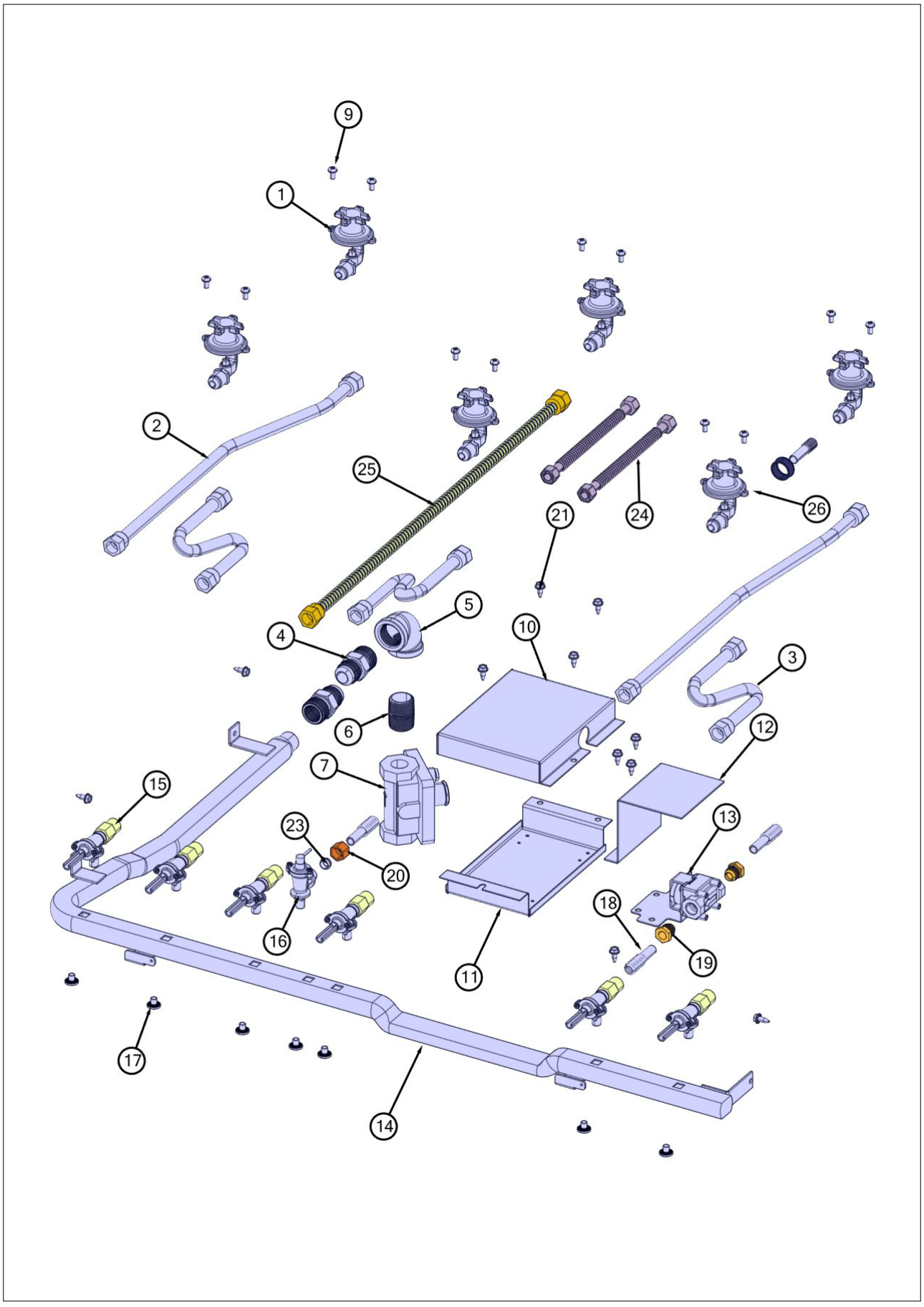
9
1
2
25
21
24
26
5
4
10
3
6
12
7
15
13
23
20
18
16
19
11
17
14

Item	Part No.	Name	Qty	Uom	NOTES
26	001394-041	18500 BTU NAT JETHOLDER	1	EA	
26	001394-044	16.6 K BTU LP JETHOLDER	1	EA	
NI	002884-000	MANIFOLD PLUG	1	EA	

Top Electrical View

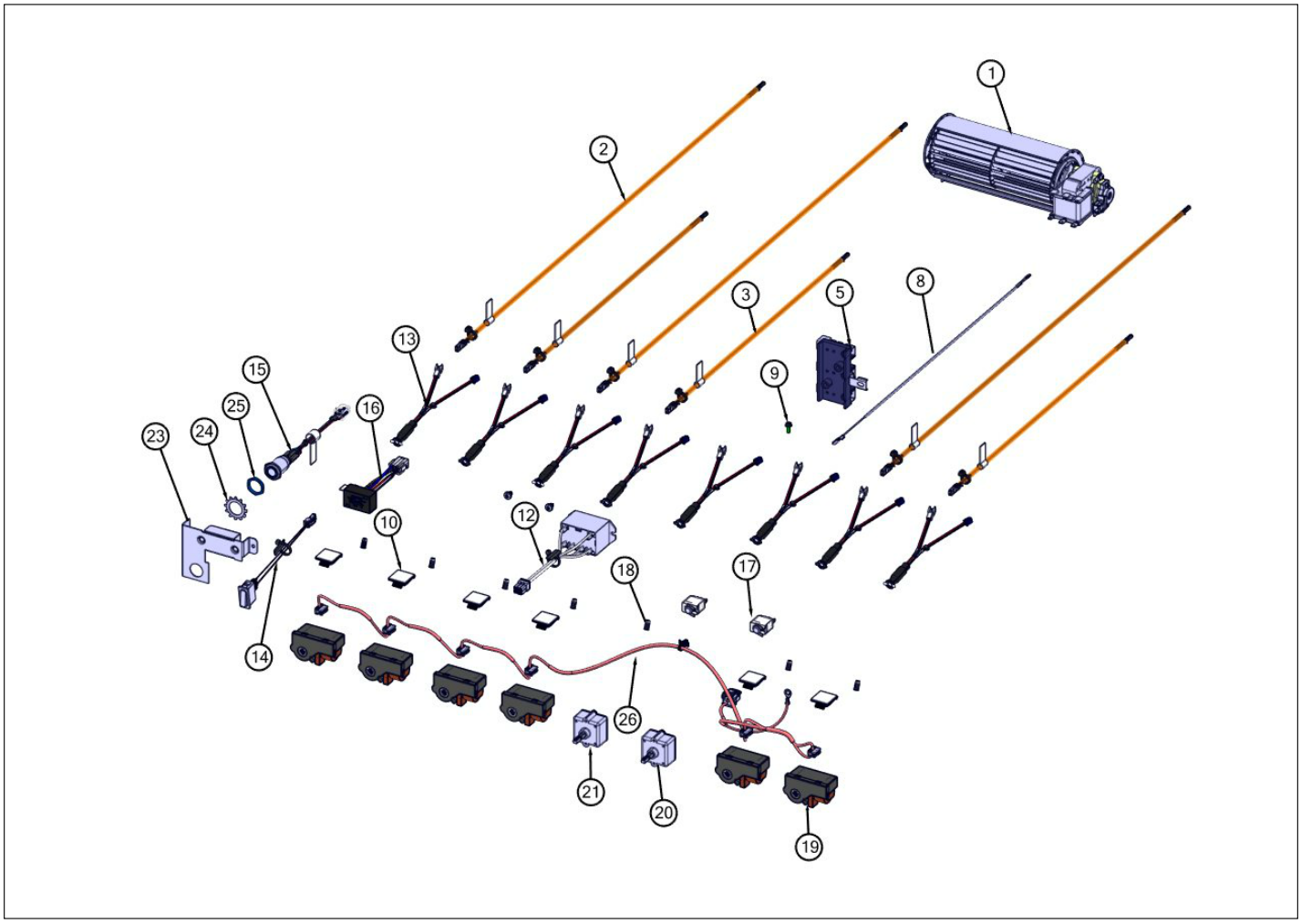

Item	Part No.	Name	Qty	Uom	NOTES
1	018607-000	FAN, BLO, 220-240V 50/60Hz ASM (MT1664)	1	EA	
2	058659-604	HARN, VGR5, ELEC, BURN, REAR	3	EA	
3	058659-603	HARN, VGR5, ELEC, BURN, FRNT	3	EA	
5	PE070147	TERMINAL BLOCK (VDSC)	1	EA	
8	044607-000	WIRE, GROUND	1	EA	
9	PD020010	10 X 3/8 GREEN GROUNDING SCREW	1	EA	
10	049878-000	CORD, CLIP, ADHESIVE	6	EA	
12	060330-000	RELAY, DPST, 30A, 120VAC COIL, 6PIN CON	1	EA	
13	048809-000	LAMP, LED, 12VDC, 2.84K, WHT HS, ASM & FAMILY	7	EA	
14	046283-000	SWITCH, LIGHTS, ACCENT W/CONN	1	EA	
15	044195-000	SWITCH, PB-LT, 5WIRE, ASSY	1	EA	
16	069993-000	12 Volt Power Supply Kit	1	EA	
Not Shown	NOTE	See TC-0118-SP Service Bulletin		EA	
17	043135-000	HOUSING, LIGHT, LED, BLUE, 3.3V	3	EA	
18	044937-000	LENS, COVER, LED, CLEAR	7	EA	
19	035795-000	MODULE, IGN, GAS,SNGL	6	EA	
20	PJ030035	THERMOSTAT	1	EA	
21	PJ030033	SELECTOR (10 POS)	1	EA	
23	068333-000	BRKT, PWR, SUPPLY, VGR5	1	EA	
Not Shown	NOTE	See TC-0118-SP Service Bulletin		EA	
24	059470-000	WASHER, LOCK, TOOTH, EXTERNAL, 3/4", SS	1	EA	
25	059466-000	NUT, SWITCH, M19 X 1.0, NPCU	1	EA	
26	059162-000	HARN, VGR5366B, IRIS	1	EA	

Decor View

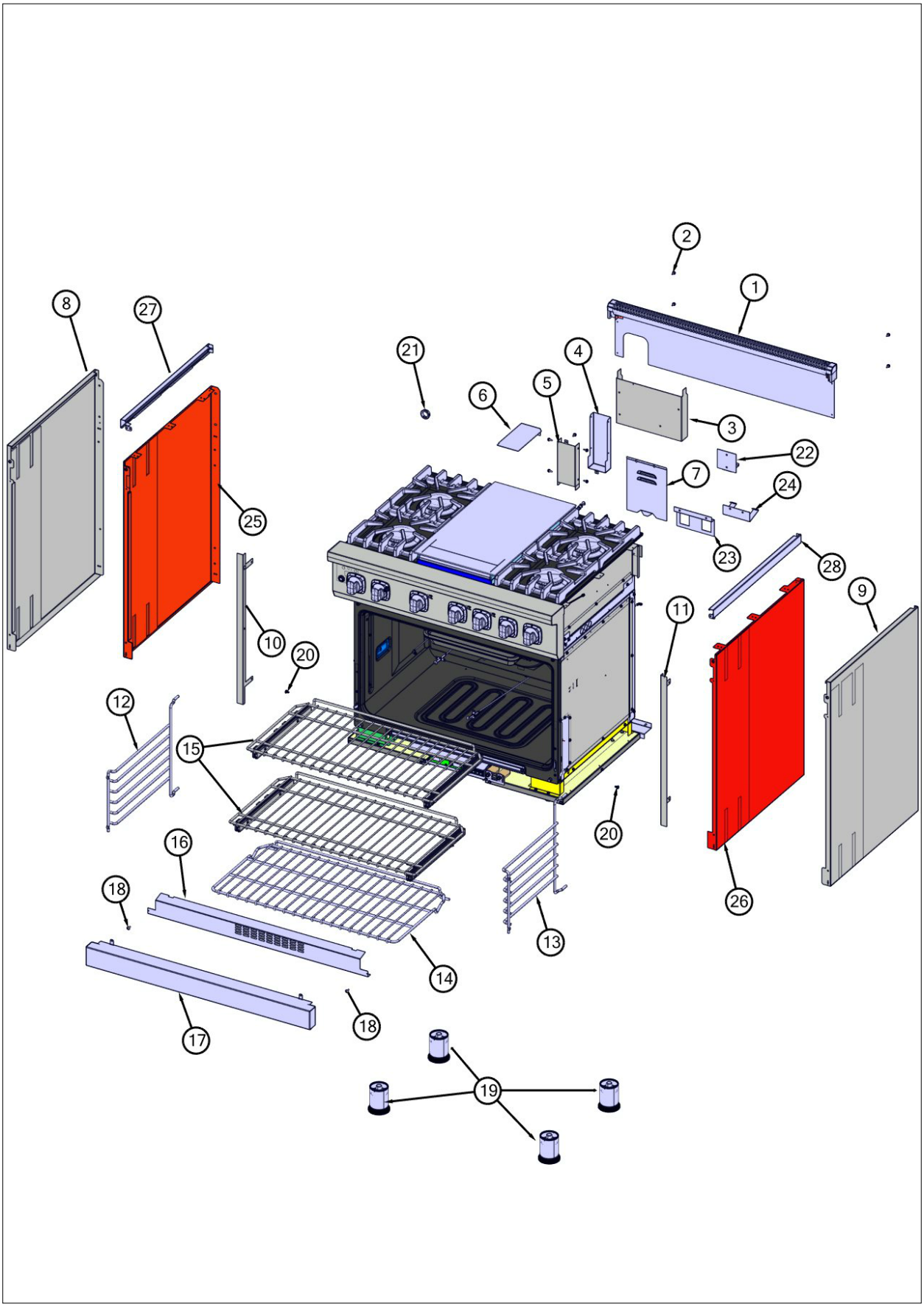

Item	Part No.	Name	Qty	Uom	NOTES
1	062400-000	TRIM, IS, WELD, ASM, 36"	1	EA	
2	003860-000	10-18 x .500 FASTNR,SCR,HXWH,STL,ZPLT	50	EA	
3	003681-000	DUCT, AIR	1	EA	
4	A20010101	FLUE, OUTSIDE SHELL	1	EA	
5	A20010102	FLUE, CENTER EXTENDED	1	EA	
6	004016-000	PLATE,SVCE,RGLT	1	EA	
7	035342-000	BACK COVER ACCESS DOOR	1	EA	
8	063332-000	SIDE PANEL ASSY, LH, SST	1	EA	
9	063331-000	SIDE PANEL ASSY, RH, SST	1	EA	
10	004607-000	OVEN, TRIM, FR, SIDE, LH, 36	1	EA	
11	004606-000	OVEN, TRIM, FR, SIDE, RH, 36	1	EA	
12	066227-402	RACK, ASM, LH- BK	1	EA	
13	066226-402	RACK, ASM, RH- BK	1	EA	
14	041047-000	RACK, DF, PRO, 36"	1	EA	
15	024668-000	RACK PULLOUT ASM 36"	2	EA	
16	005381-000	Access, grille panel	1	EA	
17	065975-000	KICKPLATE, DUAL FUEL, SST, 36"	1	EA	
17	042323-024	KICKPLATE VDSC 36, AR	1	EA	
17	042323-002	KICKPLATE VDSC 36, BK	1	EA	
17	042323-008	KICKPLATE VDSC 36, BU	1	EA	
17	042323-013	KICKPLATE VDSC 36, CB	1	EA	
17	042323-005	KICKPLATE VDSC 36, GG	1	EA	
17	042323-006	KICKPLATE VDSC 36, WH	1	EA	
18	PD010003	10-24 X 1/2 PH.TR.HD.SERD.M.S.	2	EA	
19	044178-000	RANGE, LEG, ADJUSTABLE	4	EA	
20	014143-000	SCR 10-12 A SHLD TRP 1/2 S ZN BLUE	2	EA	
21	PD040152	SNAP BUSHING	2	EA	
22	A2002654	ANTI-TIP DEVICE (VDSC)	1	EA	
23	060771-000	BRACKET, TIP, ANTI	1	EA	
24	060815-000	BRACKET, TIP, ANTI, HOOK	1	EA	

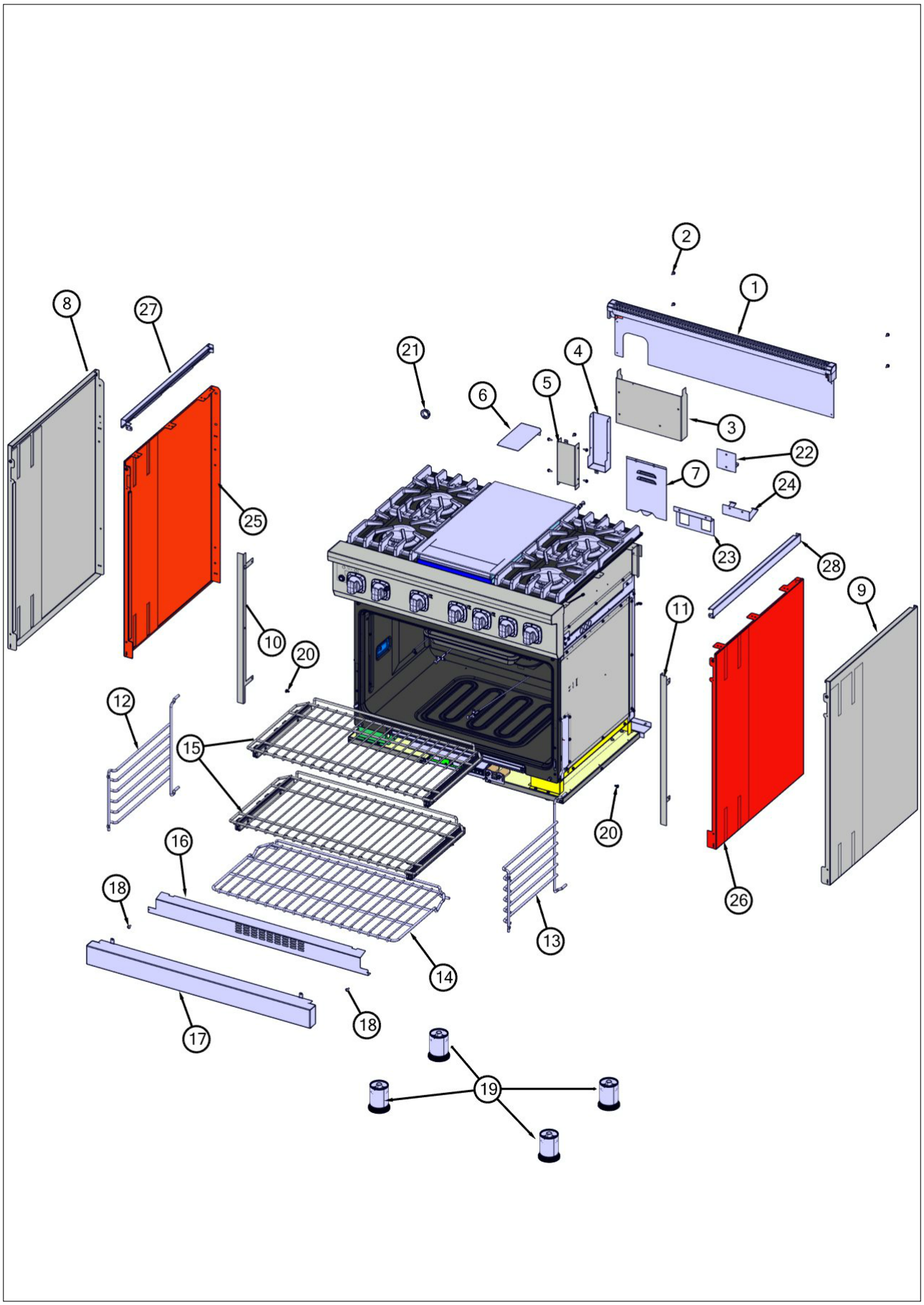
1
2
3
4
5
6
7
8
9
10
11
12
13
14
15
16
17
18
19
20
21
22
23
24
25
26
27
28

Item	Part No.	Name	Qty	Uom	NOTES
25	064550-024	RANGE, PNL, ASM, SIDE, LH, DECARB AR	1	EA	
25	064550-002	RANGE, PNL, ASM, SIDE, LH, DECARB BK	1	EA	
25	064550-008	RANGE, PNL, ASM, SIDE, LH, DECARB BU	1	EA	
25	064550-013	RANGE, PNL, ASM, SIDE, LH, DECARB CB	1	EA	
25	064550-005	RANGE, PNL, ASM, SIDE, LH, DECARB GG	1	EA	
25	064550-006	RANGE, PNL, ASM, SIDE, LH, DECARB WH	1	EA	
26	064549-024	RANGE,PNL,ASM,SIDE,RH, DECARB AR	1	EA	
26	064549-002	RANGE,PNL,ASM,SIDE,RH, DECARB BK	1	EA	
26	064549-008	RANGE,PNL,ASM,SIDE,RH, DECARB BU	1	EA	
26	064549-013	RANGE,PNL,ASM,SIDE,RH, DECARB CB	1	EA	
26	064549-005	RANGE,PNL,ASM,SIDE,RH, DECARB GG	1	EA	
26	064549-006	RANGE,PNL,ASM,SIDE,RH, DECARB WH	1	EA	
27	062476-000	TRIM, SIDE, LH	1	EA	
Not Shown	NOTE	(FOR USE WITH COLORED SIDE PANELS ONLY)		EA	
28	062475-000	TRIM, SIDE, RH	1	EA	
Not Shown	NOTE	(FOR USE WITH COLORED SIDE PANELS ONLY)		EA	

Door View

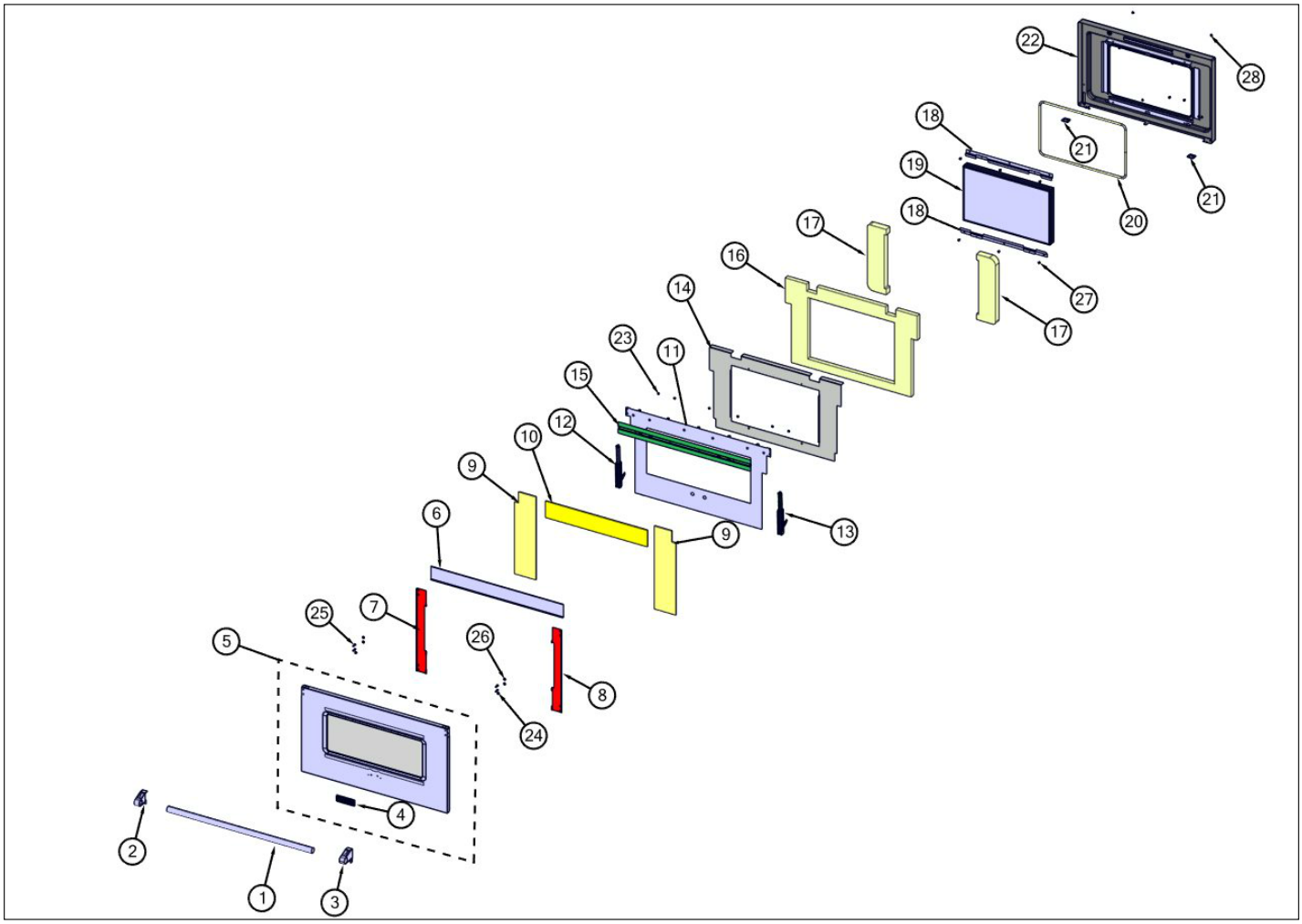
22
28
18
21
19
21
20
18
17
16
27
14
17
23
11
15
12
10
9
6
9
13
25
7
5
26
8
24
4
2
1
3

Item	Part No.	Name	Qty	Uom	NOTES
1	006080-000	36" DOOR HANDLE, 35.5	1	EA	
2	003011-000	DOOR HANDLE ENDCAP ASSY, LH (CHROME)	1	EA	
3	003012-000	DOOR HANDLE ENDCAP ASSY, RH (CHROME)	1	EA	
4	041992-000	NAMEPLATE, VIKING, 4.500"	1	EA	
5	062386-000	DOOR, OS, KIT, 36" ASM	1	EA	
5	062796-024	DOOR, OS, KIT, 36" ASM, PAINTED AR	1	EA	
5	062796-002	DOOR, OS, KIT, 36" ASM, PAINTED BK	1	EA	
5	062796-008	DOOR, OS, KIT, 36" ASM, PAINTED BU	1	EA	
5	062796-013	DOOR, OS, KIT, 36" ASM, PAINTED CB	1	EA	
5	062796-005	DOOR, OS, KIT, 36" ASM, PAINTED GG	1	EA	
5	062796-006	DOOR, OS, KIT, 36" ASM, PAINTED WH	1	EA	
6	062385-000	DOOR, SINK, AL, VDR5, 36"	1	EA	
7	062383-000	BRACKET, DOOR, LH, VDR5, SKIN	1	EA	
8	062382-000	BRACKET, DOOR, RH, VDR5, SKIN	1	EA	
9	062384-000	INSULATION, DOOR, SIDE, SUPERWOOL, 0.25", VDR5, 36	2	EA	
10	062380-000	INSULATION, DOOR, TOP, SUPERWOOL, 0.25", VDR5	1	EA	
11	062378-000	DOOR SKIN INSULATION RETAINER ASSY, 36"	1	EA	
12	046545-000	HINGE, NUOVA STAR, LH, GREEN	1	EA	
13	046544-000	HINGE, NUOVA STAR, RH, GREEN	1	EA	
14	006076-000	DOOR LINER INSULATION RETAINER, 36"	1	EA	
15	006089-000	DOOR SKIN MTG BRACKET ASSY, 36"	1	EA	
16	024492-000	INSULATION, DOOR LINER, 36"	1	EA	
17	024489-000	INSULATION, DOOR PLUG, 36"	2	EA	
18	004153-000	DOOR GLASS HOLDER BRACKET	2	EA	

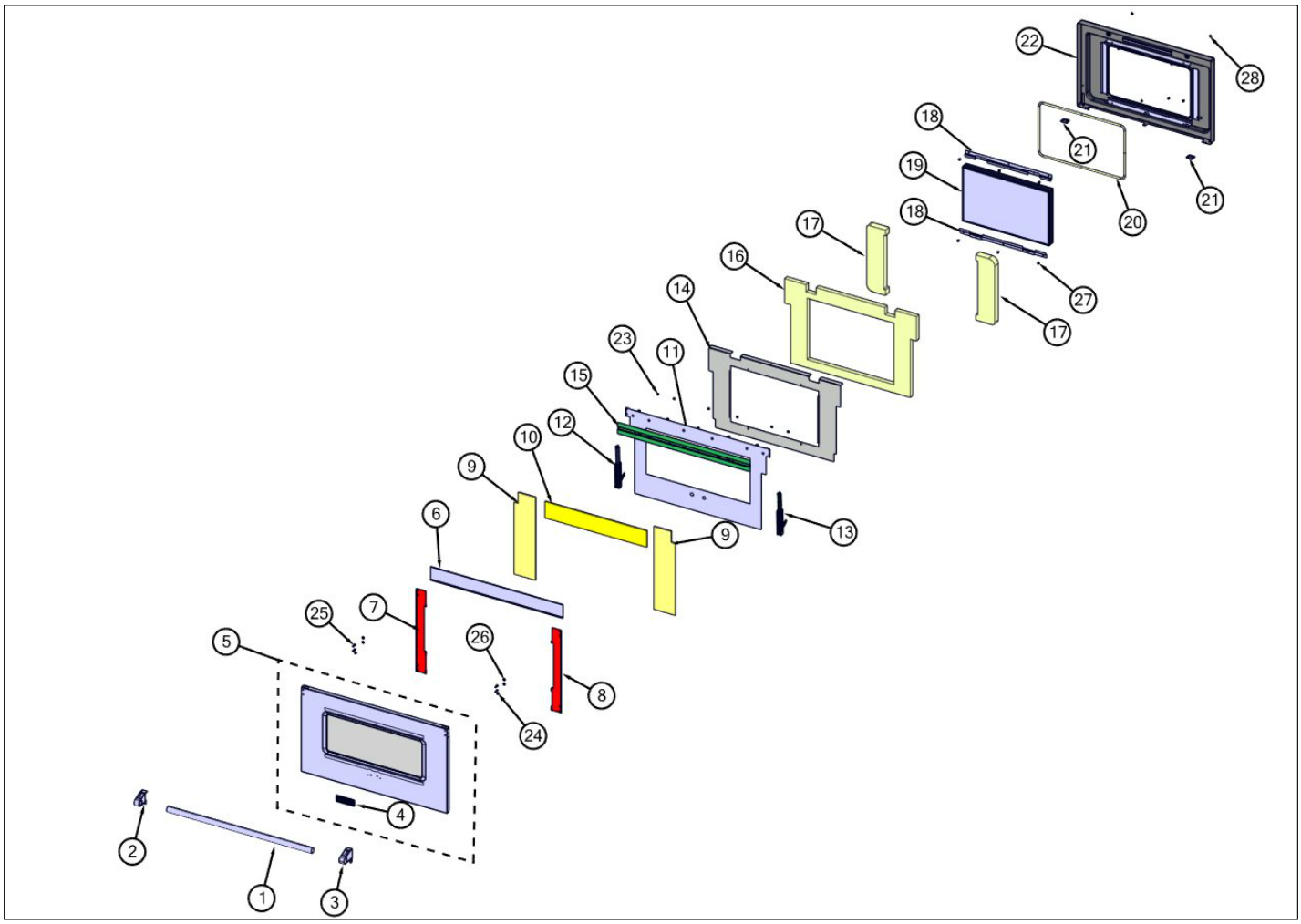
22
28
18
21
19
21
20
18
17
27
16
17
14
23
11
15
12
10
9
6
9
13
25
7
26
5
8
24
4
2
1
3

Item	Part No.	Name	Qty	Uom	NOTES
19	PE060094	30" WINDOW PACK	1	EA	
20	000594-000	BLACK FIBERGLASS ROPE 3/8"	7	EA	
21	048954-000	SHIM, HINGE, DF	2	EA	
22	048957-402	LINER, DOOR, WLD, ASSY 36" BK	1	EA	
23	PD030010	#10-24 KEPS NUT ZINC PLATED	6	EA	
24	pd020073	SRW #10 X 24 X 3/8 WAFER HD TYPE23	2	EA	
25	030823-000	#10-32 PAN HEAD PHILLIPS MACHINE SCREW	4	EA	
26	004907-000	STEEL FINISHING PLUG, NICKEL PLTD 25/64" HOLE	4	EA	
27	004526-000	10 x 1/2 PH, NPLT, TAPPING SCREW	10	EA	
28	PD020063	SCREW-#8(A) X 3/8"PH WFR HD/BK OXID	2	EA	

Cavity Electrical View

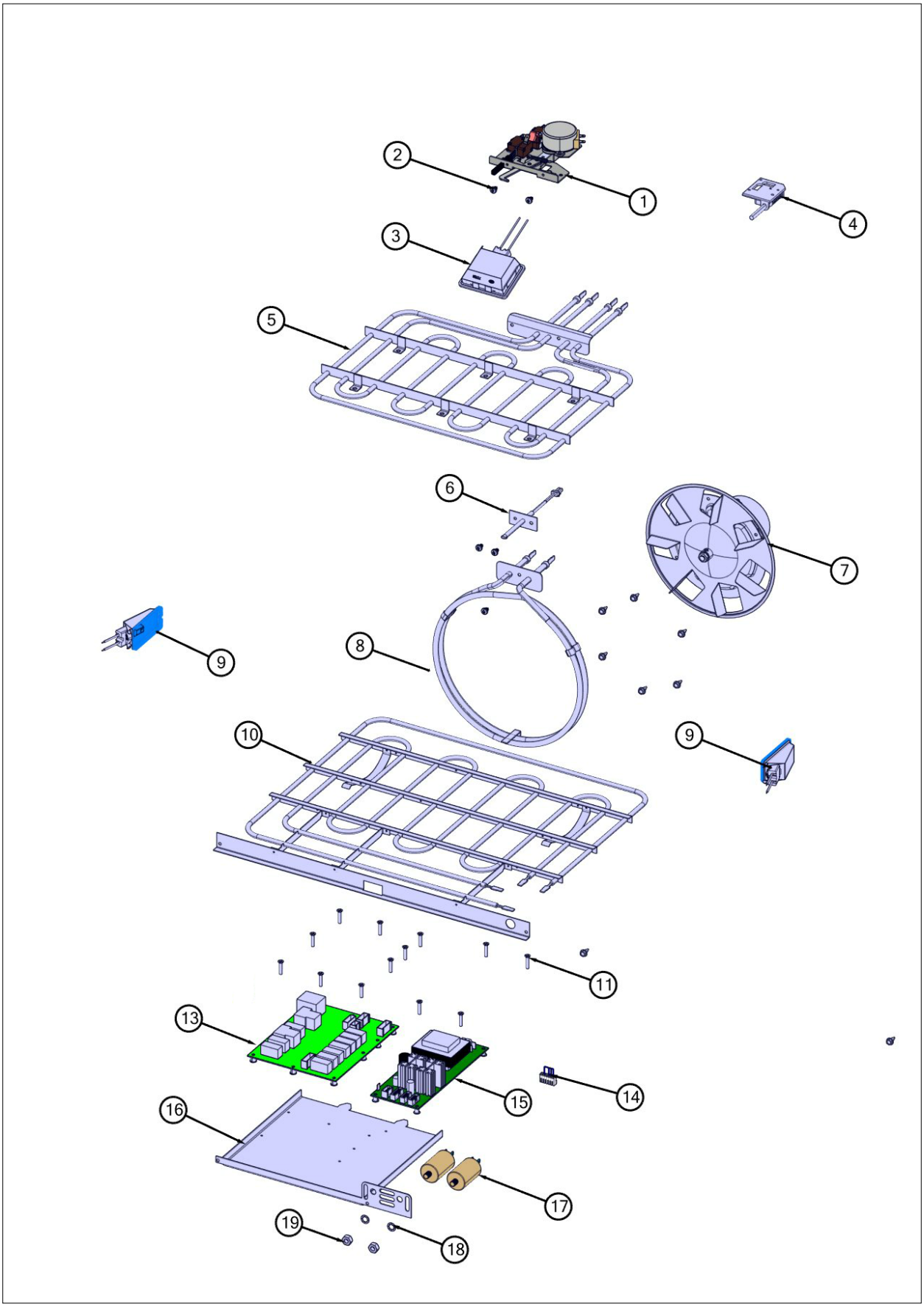

Item	Part No.	Name	Qty	Uom	NOTES
1	039293-000	LATCH, ELEC, 240V, ASSY	1	EA	
2	037304-000	FASTENER, PNH, TORX, AB, PSVD, WAX	5	EA	
3	020403-000	BJB SLIMLINE 40W BULB	1	EA	
4	PE050208	DOOR SWITCH	1	EA	
5	PJ010049	BROIL ELEMENT	1	EA	
6	PE050206	RTD THERMOSTAT PROBE	1	EA	
7	G32014020	CONVECTION FAN ASSY	1	EA	
8	PJ010047	CONVECTION ELEMENT	1	EA	
9	068653-601	LIGHT, 120V/25W, G9, HALOGEN, SIDE	2	EA	
10	PJ010048	BAKE ELEMENT	1	EA	
11	PD020043	SCREW, #6-32 X .750 PH. CTRSK T(F)	13	EA	
13	046142-571	CONTROL, EOC4, LED, V39/V51 & FAMILY	1	EA	
14	023022-000	HARN, HEADER, MODEL 17 (SEE MODEL_HEADER)	1	EA	
15	021340-000	LINEAR POWER SUPPLY, SINGLE	1	EA	
16	023825-000	TRAY, CNTRL, EOC4 SMPS	1	EA	
17	053905-000	CAPACITOR, MOTOR, 3uF	2	EA	
18	PD040164	5/16 INTERNAL TOOTH LOCK WASHER TYPE A	2	EA	
19	PD030172	M8 X 1.25MM NUT	2	EA	

Wiring View 1

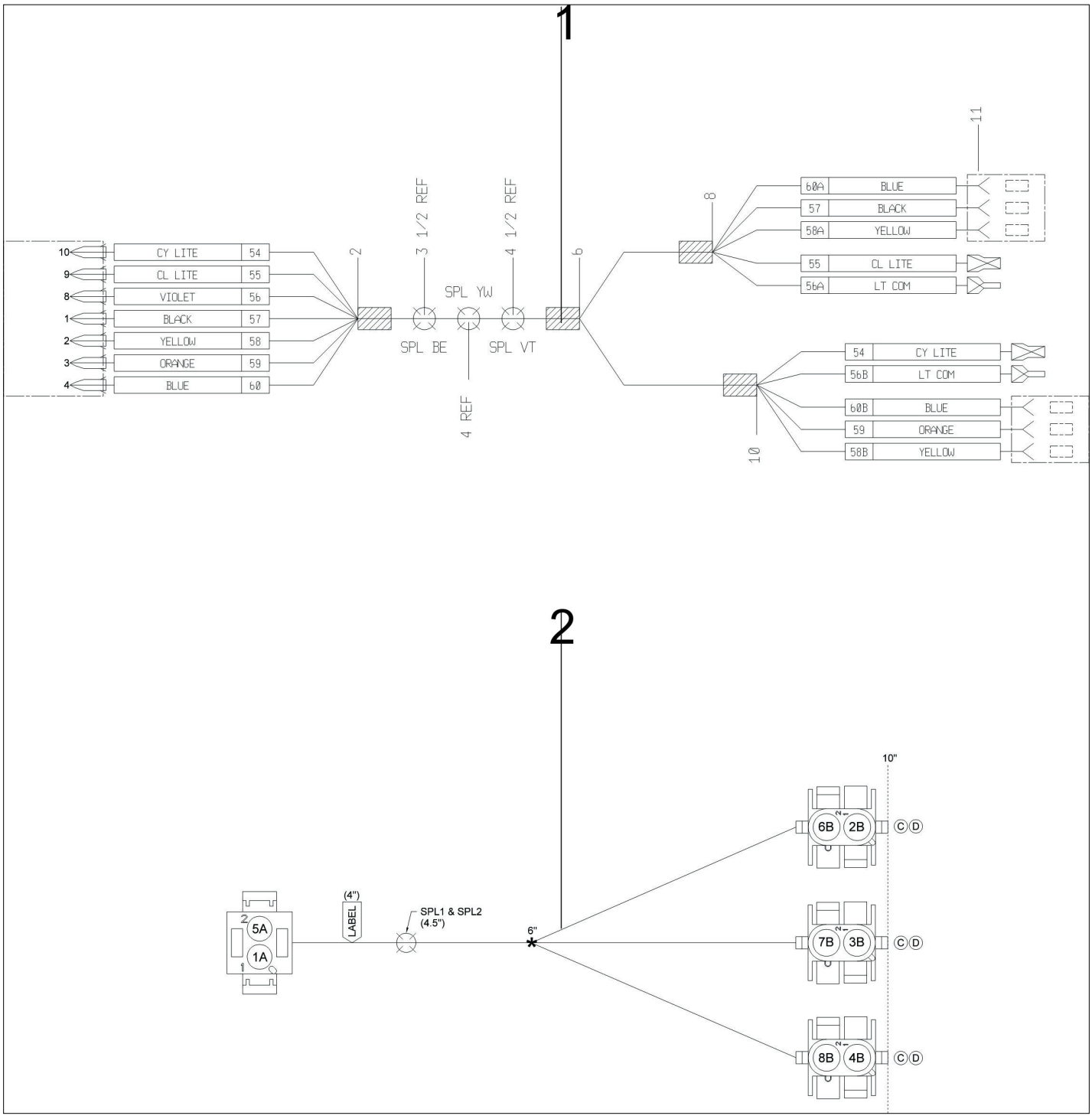

Item	Part No.	Name	Qty	Uom	NOTES
1	020019-000	HARNESS, WRG, CONTROL	1	EA	
2	023107-000	ADAPTER, LT, ASM, SINGLE TO TRIPLE	1	EA	

Wiring View 2

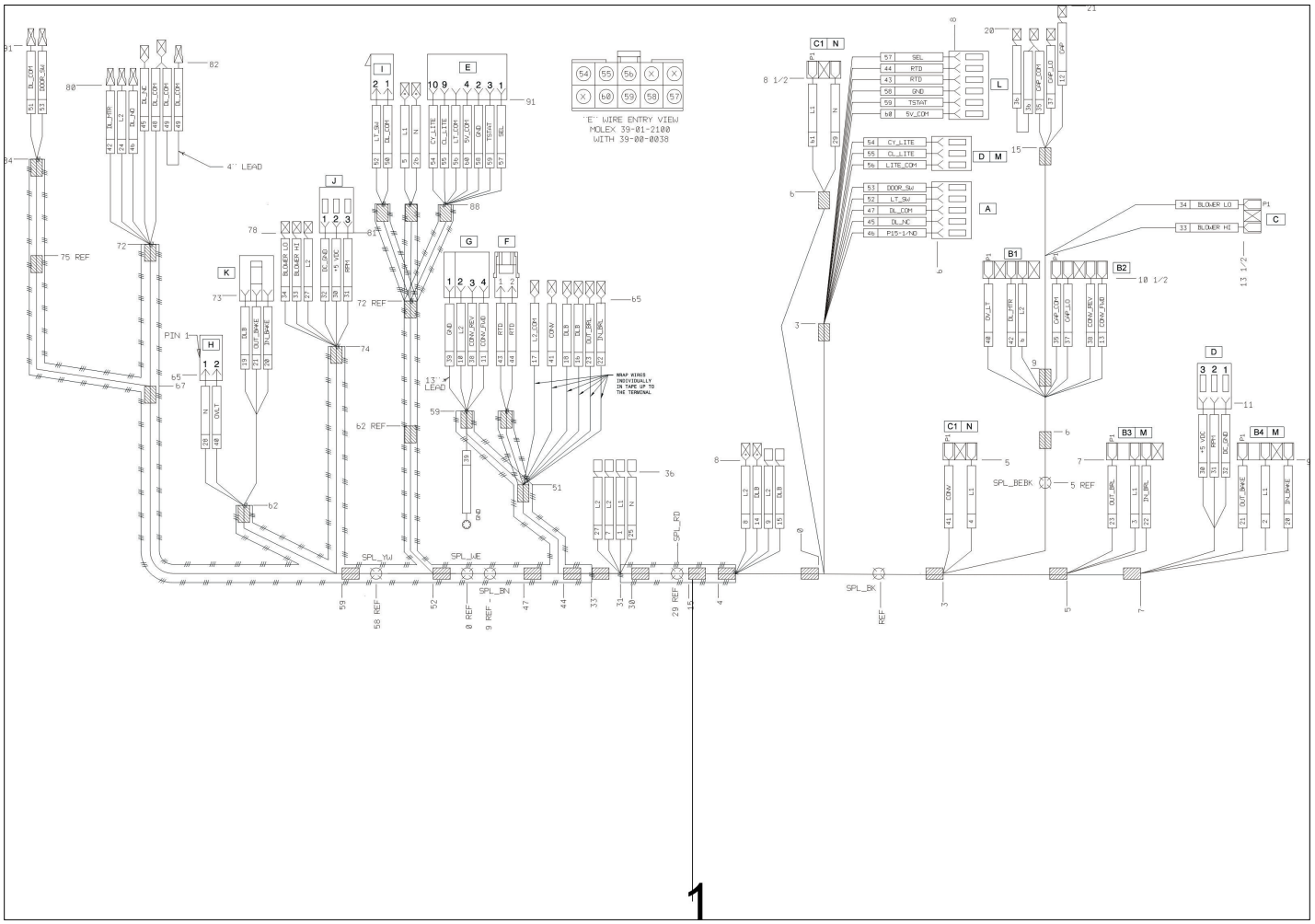

Item	Part No.	Name	Qty	Uom	NOTES
1	038693-000	HARN, MAIN, OVEN, VDSC	1	EA	

Wiring View 3

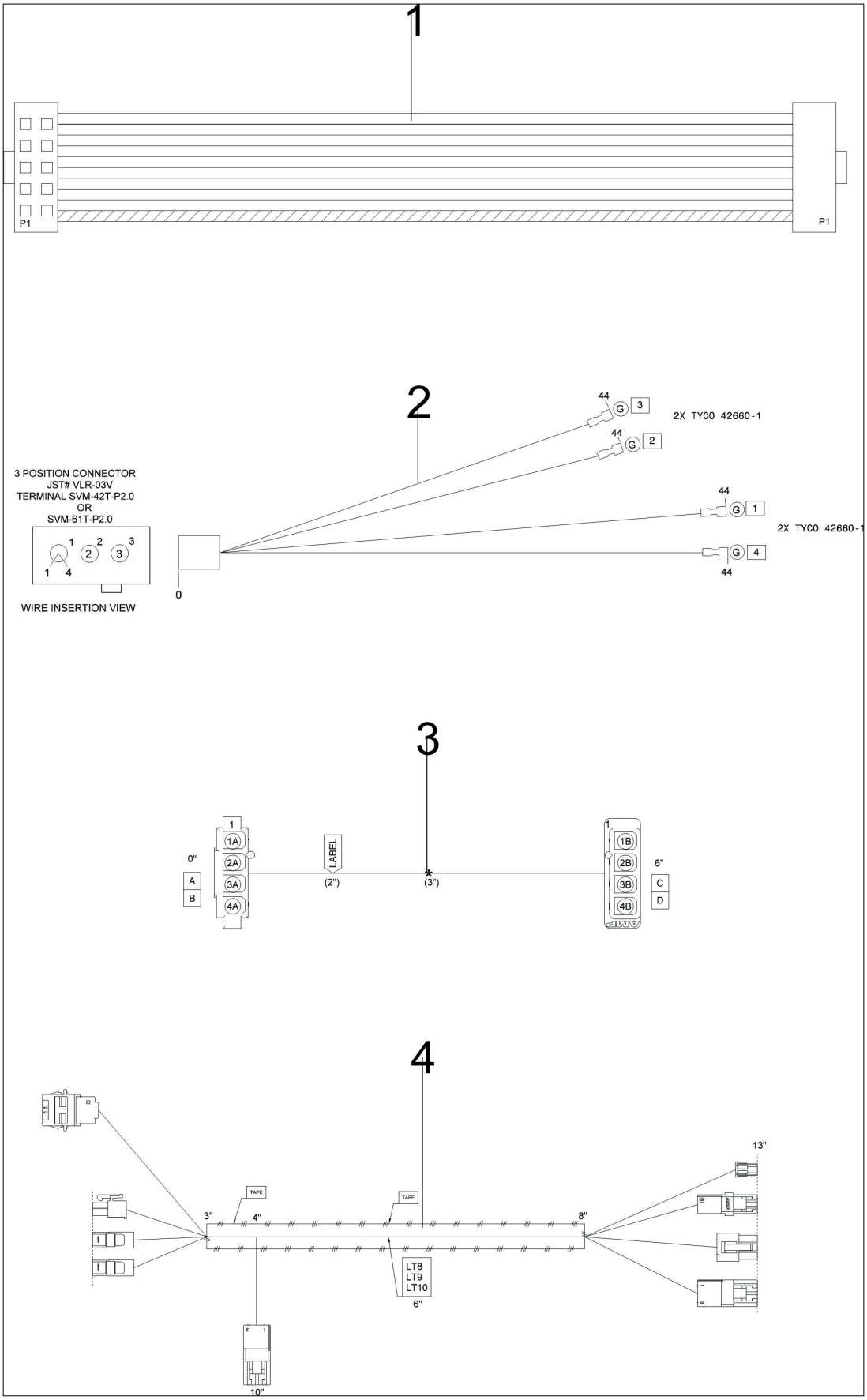

Item	Part No.	Name	Qty	Uom	NOTES
1	024869-000	RIBBON CABLE, RH	1	EA	
2	PE070739	BAKE ELEMENT HARNESS	1	EA	
3	050081-000	HARN, JUMPER, ADAPT CONV FAN	1	EA	
4	060246-000	HARN, VDR530/36, LT SW & BULLNOSE	1	EA	

Wiring View 4

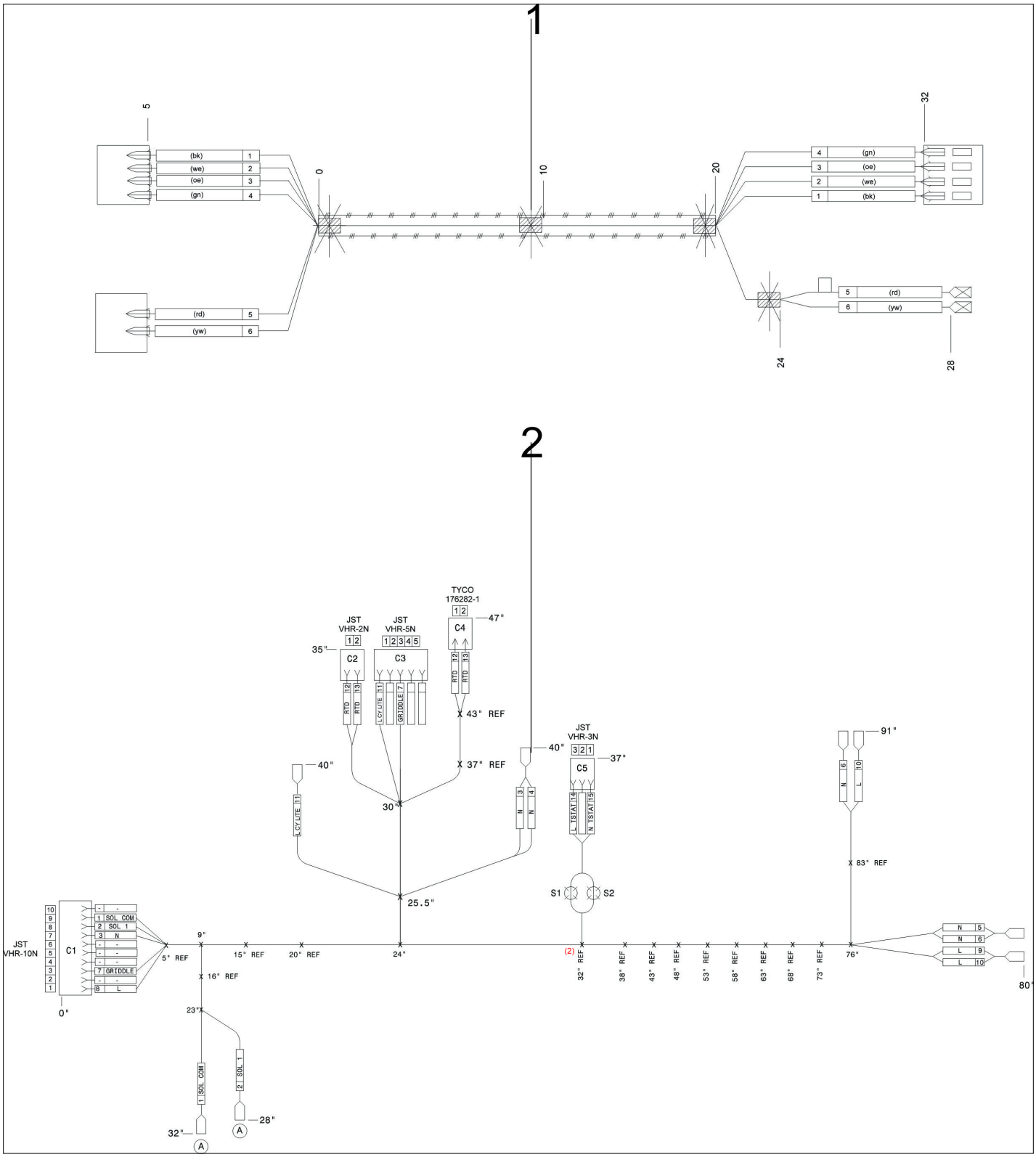

Item	Part No.	Name	Qty	Uom	NOTES
1	015103-000	HARNESS,TEST,VDSC-T MODELS	1	EA	
2	036200-000	HARNESS. W/ GRIDDLE	1	EA	

Appendix A:Pages Index

Base View 3
Cavity Electrical View 8
Control View 1
Decor View 6
Door View 7
Gas Asm View 4
Surface Cooking View 2
Top Electrical View 5
Wiring View 1 9
Wiring View 2 10
Wiring View 3 11
Wiring View 4 12

Appendix B:Parts Index

000594-000 7
001394-041 4
001394-044 4
001394-046 4
002884-000 4
002923-000 2
002941-000 3
003011-000 7
003012-000 7
003053-000 3
003054-000 3
003245-000 3
003272-000 3
003326-000 3
003327-000 3
003328-000 3
003356-000 3
003681-000 6
003763-000 3
003860-000 . . . . . 2, 3, 4, 6
004016-000 6
004153-000 7
004285-000 3
004503-000 3
004526-000 7
004602-000 2
004606-000 6
004607-000 6
004698-000 3
004907-000 7
005255-000 3
005381-000 6
005480-000 4
006076-000 7
006080-000 7
006089-000 7
006177-402 3
007147-000 4
007726-000 4
009111-000 4
009197-000 2
009402-000 4
012771-000 2
013386-000 4
013547-000 3
013564-000 3
013572-000 3
013621-000 3
014143-000 6
015103-000 12
016021-000 3
016838-000 3
016843-000 3
018200-000 2
018607-000 5
020019-000 9
020403-000 8
021340-000 8
023022-000 8
023107-000 9
023825-000 8
024301-000 . . . . . 2, 4
024305-000 . . . . . 2, 4
024398-000 2
024489-000 7
024492-000 7
024659-000 2
024668-000 6
024869-000 11
024909-000 3
027968-000 1
030823-000 7
032861-000 3
035342-000 6
035795-000 5
036200-000 12
037304-000 8
038268-000 3
038693-000 10
039293-000 8
041047-000 6

041992-000 7
042323-002 6
042323-005 6
042323-006 6
042323-008 6
042323-013 6
042323-024 6
043135-000 5
043800-000 3
044178-000 6
044195-000 5
044322-000 4
044325-000 4
044512-000 1
044607-000 5
044824-000 4
044937-000 5
045060-000 3
046142-571 8
046261-000 3
046283-000 5
046544-000 7
046545-000 7
046651-000 3
047829-000 3
048195-000 3
048199-000 3
048326-000 1
048461-000 3
048809-000 5
048954-000 7
048957-402 7
049416-000 2
049420-000 2
049578-000 2
049588-000 2
049609-000 2
049878-000 5
050081-000 11
051594-000 3
052632-000 3
053905-000 8
054057-000 3
058659-603 5
058659-604 5
059162-000 5
059466-000 5
059470-000 5
060246-000 11
060330-000 5
060771-000 6
060815-000 6
061029-000 1
061038-000 1
061230-000 4
061658-000 3
062378-000 7
062380-000 7
062382-000 7
062383-000 7
062384-000 7
062385-000 7
062386-000 7
062400-000 6
062475-000 6
062476-000 6
062796-002 7
062796-005 7
062796-006 7
062796-008 7
062796-013 7
062796-024 7
062953-2800 1
063331-000 6
063332-000 6
063551-000 2
063759-2809 1
063891-000 1
064108-000 3
064111-000 3
064549-002 6
064549-005 6

064549-006 6
064549-008 6
064549-013 6
064549-024 6
064550-002 6
064550-005 6
064550-006 6
064550-008 6
064550-013 6
064550-024 6
065975-000 6
066197-042 4
066226-402 6
066227-402 6
066810-042 2
066958-000 2
068333-000 5
068653-601 8
069993-000 5
A1002457 3
A20010101 6
A20010102 6
A20012649 3
A20014021 3
A2002195 3
A2002654 6
A2009697 3
E9108439BK 2
G32014020 8
PA070003 4
PB020126 4
PB020192 4
PB020193 4
PB020198 4
PB020275 3
PB040050 4
PB040192 4
PB040213 4
PB070079 3
PC030007 3
PD010003 6
PD010012 4
PD010022 3
PD020004 4
PD020010 5
PD020014 3
PD020032 1
PD020043 8
PD020046 1
PD020063 7
PD020269 1
PD030010 7
PD030172 8
PD040005 2
PD040152 6
PD040164 8
PE050206 8
PE050208 8
PE060094 7
PE070147 5
PE070739 11
PJ010047 8
PJ010048 8
PJ010049 8
PJ030033 5
PJ030035 5
PM010014 3
pd020073 7